ANBAUANLEITUNG

mounting instructions • instructions de montage • instrucciones de montaje • istruzioni di montaggio

ADV.10.057.65000/B

beinhaltet • contains • contient • contiene • contiene

KFT.10.057.30001/B

KFT.00.152.36000

GPT.10.625.19001/B

GPT.00.152.36200/B

HSK.00.745.10001/B

HSK.00.745.11001/B

LOC.00.745.10200

SW-MOTECH®

Item number: **KFT.10.057.30001/B**	Revision: **01** · Date: **08 - 2026**

PRO side carrier

~ 1.5 h.	EASY DIFFICULT

ENGLISH ·Thank you for choosing this premium product from SW-MOTECH. Visit our online shop for more information (e.g. model assignments). Required documents (e.g. national type approval) are available there for you to download.
Please read and understand all the instructions, safety information and warnings in these mounting instructions before mounting and using the product in order to avoid injury and damage. Keep these mounting instructions for reference.
This product was developed for vehicles in factory condition. Compatibility with original accessories or accessories from other manufacturers cannot be guaranteed.
These mounting instructions have been prepared to the best of our current knowledge. No legal claims relating to accuracy can be made. Errors and omissions excepted. We reserve the right to make technical and design changes. The copyright is held by SW-MOTECH.

SAFETY WARNING SYMBOL

⚠ **This warning symbol is used in these mounting instructions to warn of deadly dangers, injuries or other hazards. The words DANGER, WARNING or CAUTION are used as part of this warning symbol to convey important safety messages and information relating to the installation and use of this product. These words, together with the safety warning symbol, mean:**

⚠ **DANGER:** Indicates a hazardous situation which, if not avoided, will result in death or serious injury!

⚠ **WARNING:** Indicates a hazardous situation which, if not avoided, may result in death or serious injury!

⚠ **CAUTION:** Indicates a hazardous situation which, if not avoided, may result in minor or moderate injury!

⚠ ***NOTE:*** Important information, but not relating to a risk of death or injury (property damage only)!

GENERAL INFORMATION

⚠ **WARNING: Assembly and/or maintenance of this product requires advanced technical skill, appropriate tools, and a good understanding of tool usage and torque specifications. For your own safety, SW-MOTECH recommends having the assembly and/or maintenance carried out by a qualified and certified motorcycle workshop.**

⚠ **WARNING: If you do choose to assemble this product yourself, carefully and fully read the mounting instructions before assembly and use, and follow all instructions to avoid serious injury or death. Also observe all relevant information in the vehicle manual when mounting or using the product. IF YOU DO NOT UNDERSTAND ANY PART OF THESE MOUNTING INSTRUCTIONS OR NEED AN EXPLANATION AS TO A SPECIFIC INSTRUCTION, DO NOT ATTEMPT TO INSTALL THIS PRODUCT WITHOUT CONSULTING SW-MOTECH FOR ASSISTANCE!**

PREPARATION: Read the mounting instructions carefully and make sure that all parts on the parts list are available.

⚠ **CAUTION: Ensure that your vehicle is standing securely. Switch off the engine and remove the ignition key. Allow the engine/exhaust to cool down if necessary. Disconnect the battery when working on the electrical system. Only use proper tools and always wear safety goggles and gloves during assembly and maintenance. Have a second person help you with assembly and maintenance.**

ASSEMBLY: All parts and connections removed from the vehicle must be reinstalled according to the vehicle manufacturer's specifications or replaced with parts and hardware supplied by SW-MOTECH.

⚠ **WARNING: Secure all threads with a medium-strength liquid threadlocker, unless otherwise specified.**

⚠ **DANGER: Tightening torques not defined by SW-MOTECH must be obtained from the vehicle manufacturer or a certified motorbike workshop.**

FUNCTIONAL CHECK: After mounting the product, ensure that no moving parts are obstructed and that the function of the vehicle is not impeded. Cables and hoses must not rub against each other and/or be hindered in any way.

⚠ **WARNING: Carry out a comprehensive functionality check before you start to drive. Check the tightening torque of all connections and the tight fit of the product after the first 50 km and then at regular intervals. Mounted accessories can change the handling and stability of the vehicle.**

SW-MOTECH GmbH & Co. KG
Ernteweg 7-10
35282 Rauschenberg
Germany

info@sw-motech.com
www.sw-motech.com

The content translation is automated.
© SW-MOTECH GmbH & Co. KG

Errors and omissions excepted
Subject to technical and design changes.

Take note of the symbols and what they mean in the ASSEMBLY section. If the term OEM appears in the ASSEMBLY section, the vehicle manufacturer's specifications must be observed and applied.

If you have any questions, please don't hesitate to contact our Customer Service team or our distributors. You can find our telephone number and a list of our distributors in our online shop:
www.sw-motech.com

Use thread locker: Indicates that a thread must be coated with liquid thread locker. H (HIGH): high strength; M (MEDIUM): medium strength; L (LOW): low strength.

Tighten/note the tightening torque information: Indicates the tightening torque of a part specified by SW-MOTECH or the vehicle manufacturer (OEM).

The content translation is automated.
© SW-MOTECH GmbH & Co. KG

Errors and omissions excepted
Subject to technical and design changes.

4

1	2	3
M6 x 30; DIN 912 SC.ST.06.030.02.912.088	ø 6.4; DIN 125 US.ST.064.02.125	Ø 15 / ø 6,4 / h 9 DB.ST.0150.0064.0090.02
2/2	2/2	2/2

5

4	5	6
MSM.00.KFT.005R.11	MSM.00.KFT.005L.11	M8 x 25; DIN 912 SC.ST.08.025.02.912.088
1/1	1/1	4/4

6

7	8	9	10	11	12
KFT.10.057.001R.11	KFT.10.057.001L.11	M8 x 75; DIN 6912 SC.ST.08.075.48.6912.088	ø 8,4; DIN 125 US.ST.084.02.125	Ø 14 / ø 8,4 / h 37 DB.ST.0140.0084.0370.48	M8 x 75; DIN 7991 SC.ST.08.075.02.7991.088
1/1	1/1	2/2	2/2	2/2	2/2

13	14	15	16
Ø 20 / ø 8,4 / h 51 DB.ST.0200.0084.0510.48	MSM.00.KFT.004.11	M8 x 50; DIN 7991 SC.ST.08.050.02.7991.088	Ø 16 / ø 8,4 / h 25 DB.ST.0160.0084.0250.48
2/2	2/2	2/2	2/2

7

17	18	19	20
KFT.10.057.971.01.11	KFT.10.057.972.01.11	MSM.00.KFT.001.11	KFT.00.152.SV.8
1/1	1/1	1/1	1/1

The content translation is automated.
© SW-MOTECH GmbH & Co. KG

Errors and omissions excepted
Subject to technical and design changes.

1

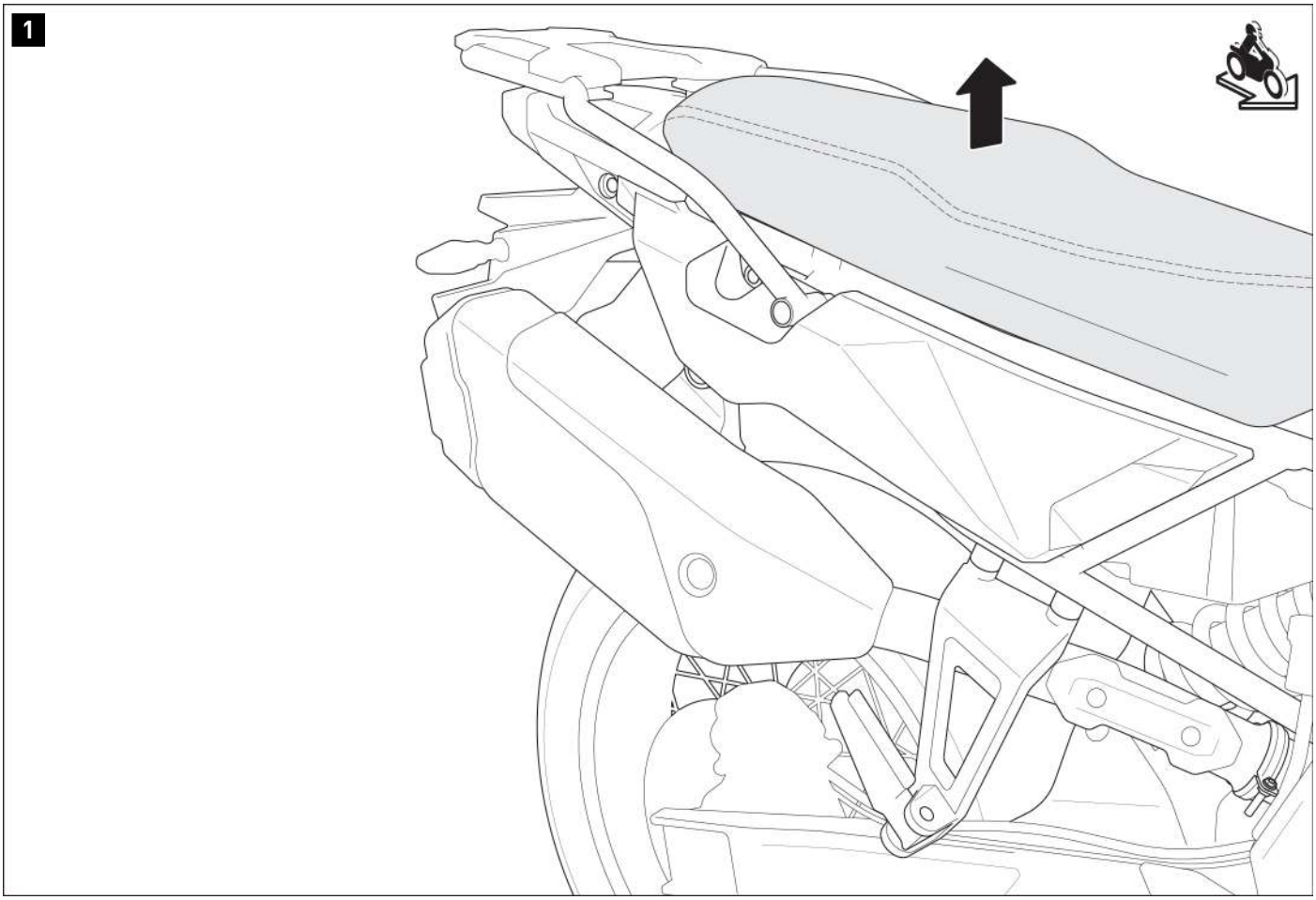

⚠ WARNING: Always wear eye and hand protection!
⚠ WARNING: Always use suitable tools!

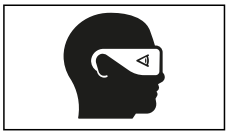

Remove the passenger seat from the vehicle.

The content translation is automated.
© SW-MOTECH GmbH & Co. KG

Errors and omissions excepted
Subject to technical and design changes.

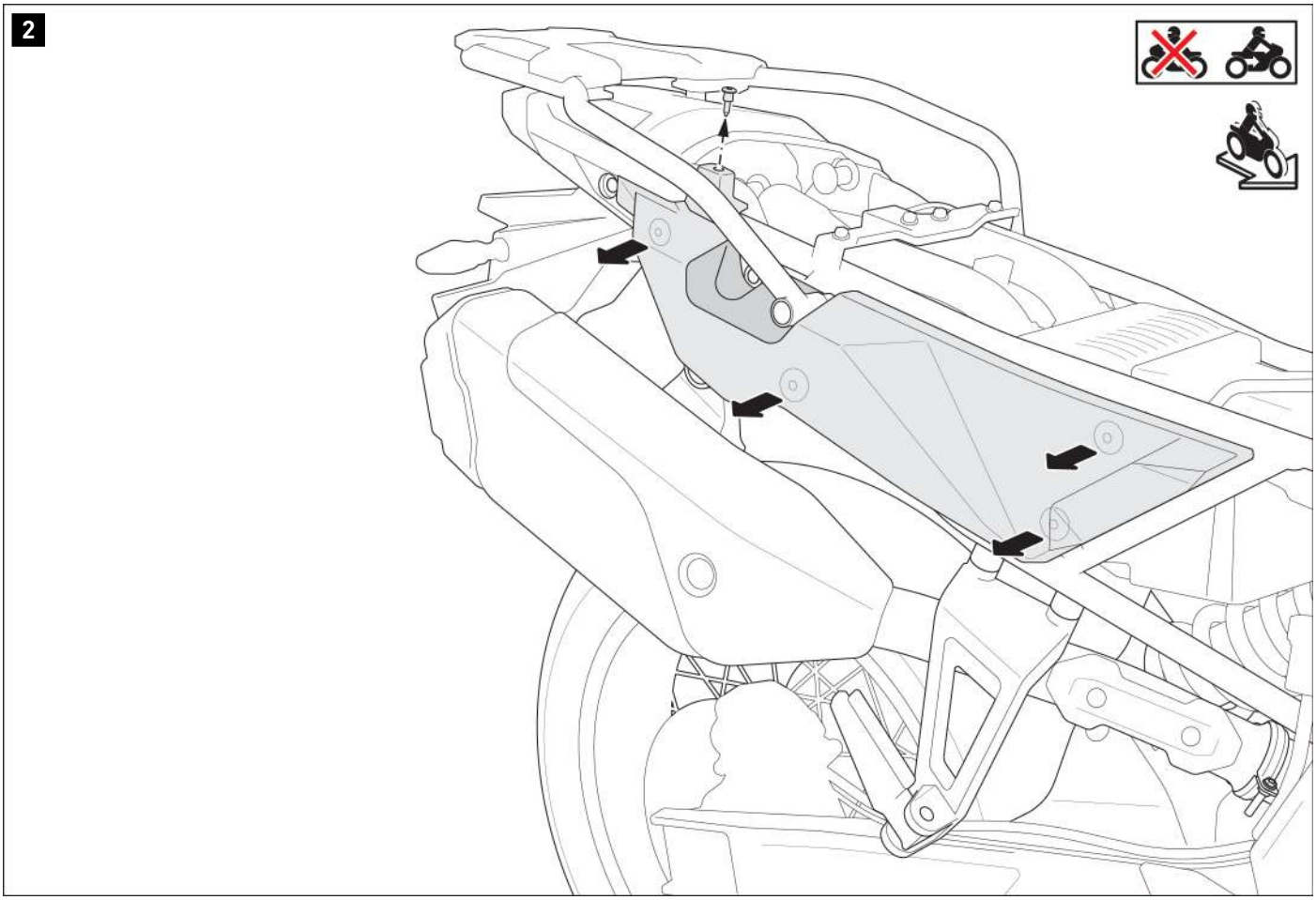

Remove the marked plastic dowels from the rear panel on the **right side of the vehicle**. Carefully pull the rear panels out of the four anchor points.

© SW-MOTECH GmbH & Co. KG

Errors and omissions excepted
Subject to technical and design changes.

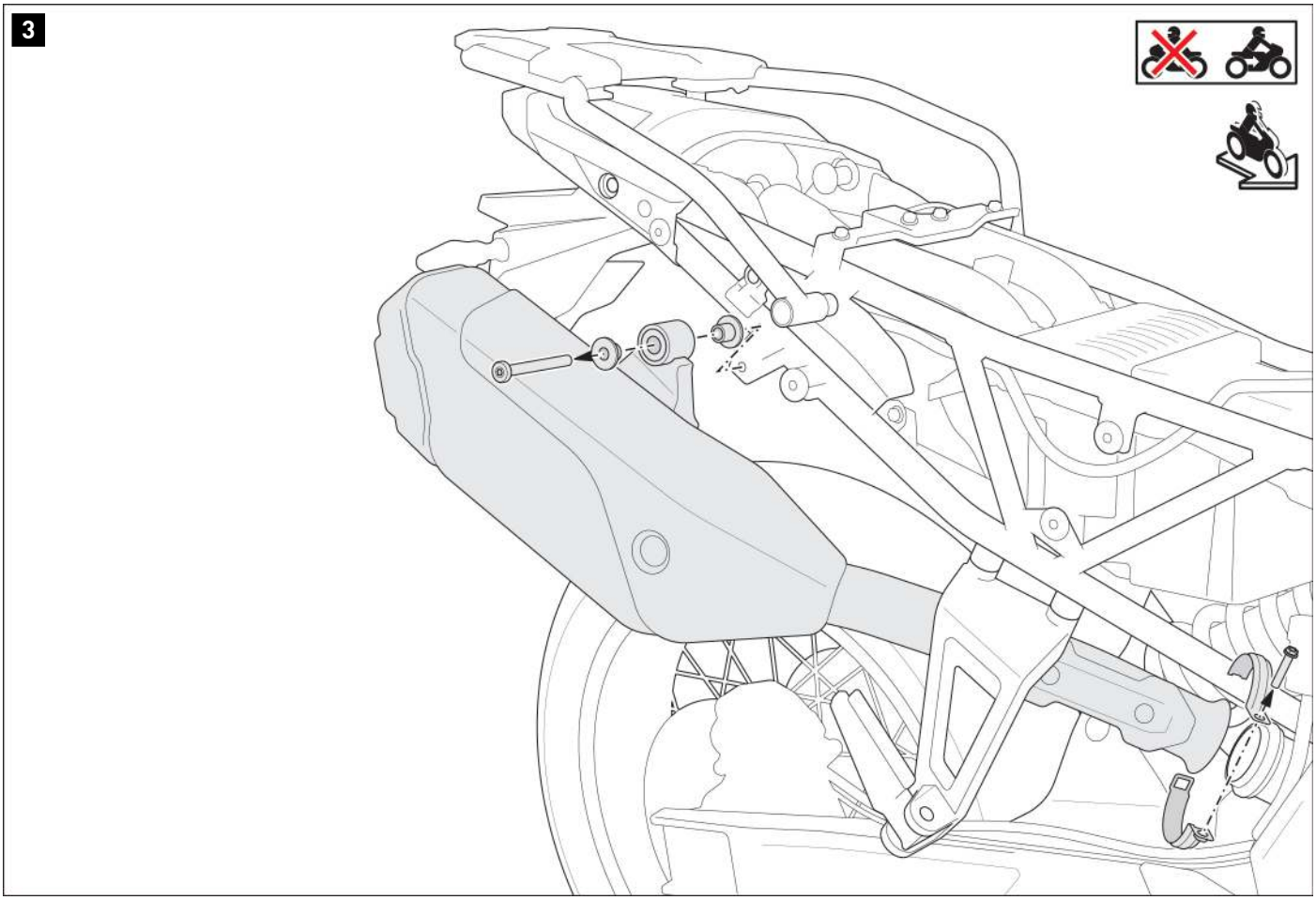

⚠ WARNING: Ensure the exhaust system has cooled down completely before dismantling!

Loosen the indicated screws and remove the exhaust system muffler from the vehicle.

The content translation is automated.
© SW-MOTECH GmbH & Co. KG

Errors and omissions excepted
Subject to technical and design changes.

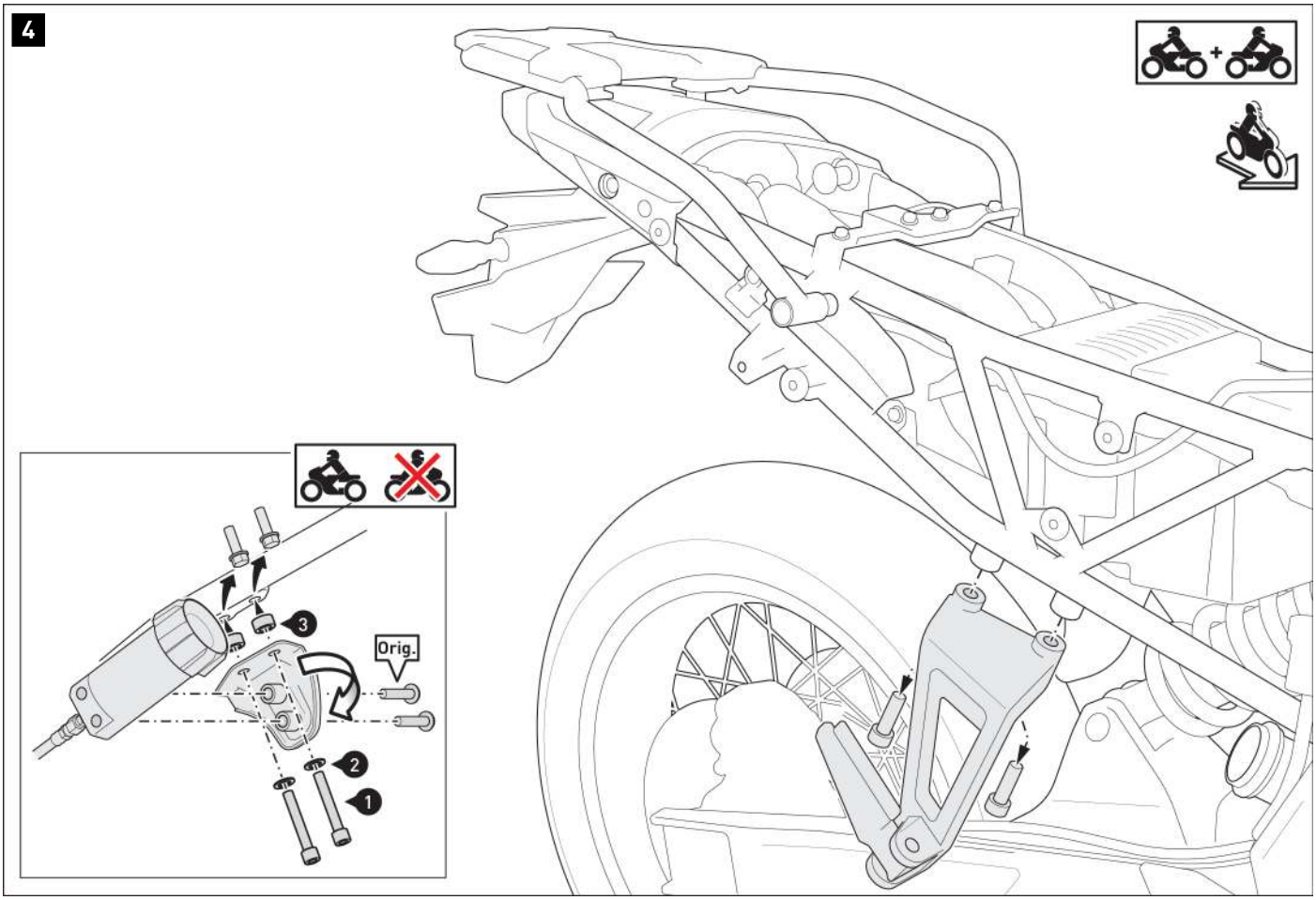

Loosen the indicated screws on **both sides** and remove the passenger footrest brackets from the vehicle.

CFMOTO 1000 MT-X (25 –): Loosen the two screws for the spring preload adjuster on the **left side of vehicle**. Next, loosen the two screws for the mounting plate; turn the spring mounting plate 180° and screw it to the (1) – (3) parts shown in the detailed illustration.
⚠ WARNING: Use liquid threadlocker!
Tighten the screws (1) according to the vehicle manufacturer's specifications. Now screw the spring preload adjuster to the mounting plate using the original screws (Orig.).
⚠ WARNING: Use liquid threadlocker!
Tighten the screws (Orig.) according to the vehicle manufacturer's specifications.

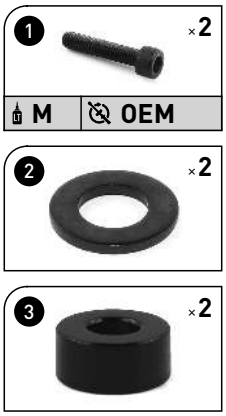

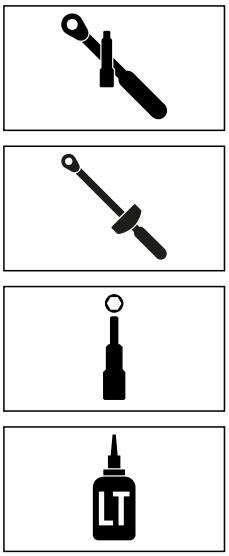

© SW-MOTECH GmbH & Co. KG

Errors and omissions excepted
Subject to technical and design changes.

5

Screw fastening tabs (4/5) onto **both sides** of the vehicle.
⚠ WARNING: Use liquid threadlocker!
Tighten the screws (6) according to the vehicle manufacturer's specifications.

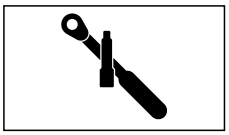

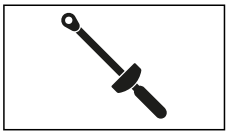

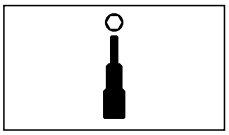

The content translation is automated.
© SW-MOTECH GmbH & Co. KG

Errors and omissions excepted
Subject to technical and design changes.

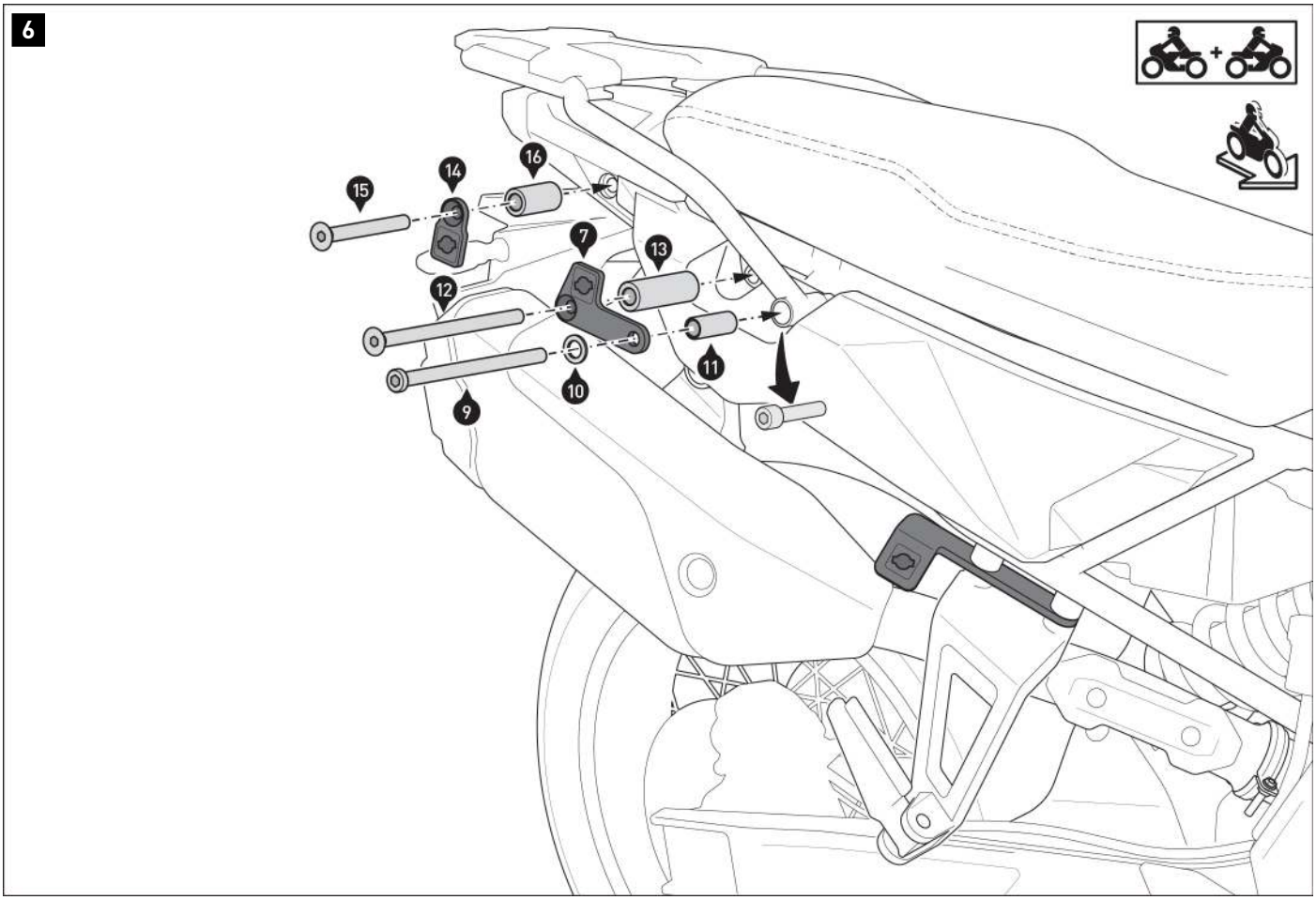

Mount any original parts dismantled in **steps [1]** and **[2]** back onto the vehicle in reverse order and in compliance with the vehicle manufacturer's specifications.

Screw fastening tabs (7/8) and (14) **onto both sides** of the vehicle.
⚠ WARNING: Use liquid threadlocker!
Do not tighten screws (9), (12) and (15) yet.

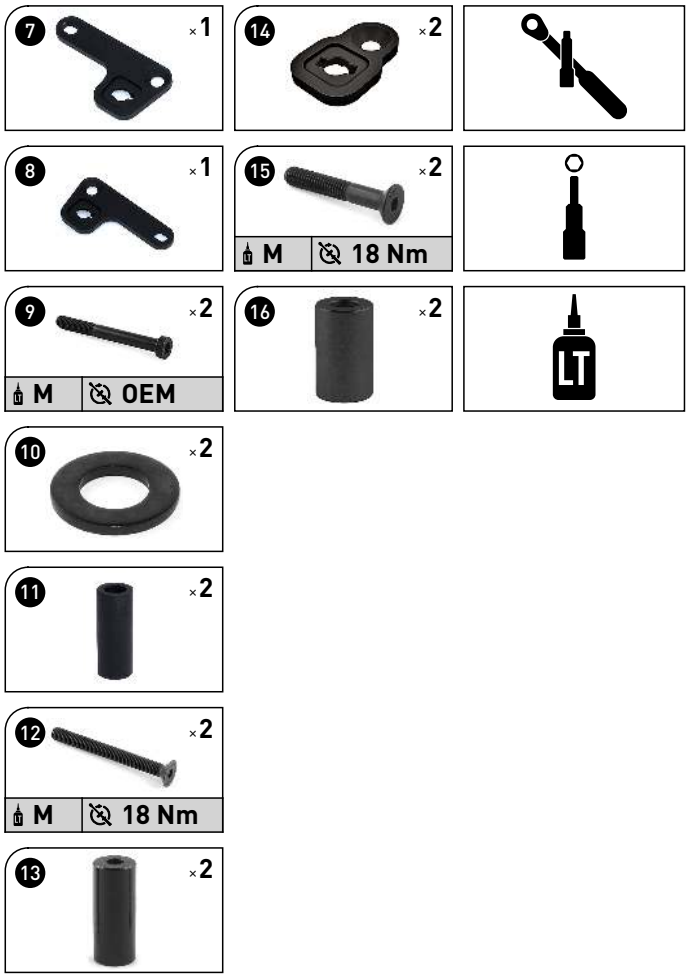

© SW-MOTECH GmbH & Co. KG

Errors and omissions excepted
Subject to technical and design changes.

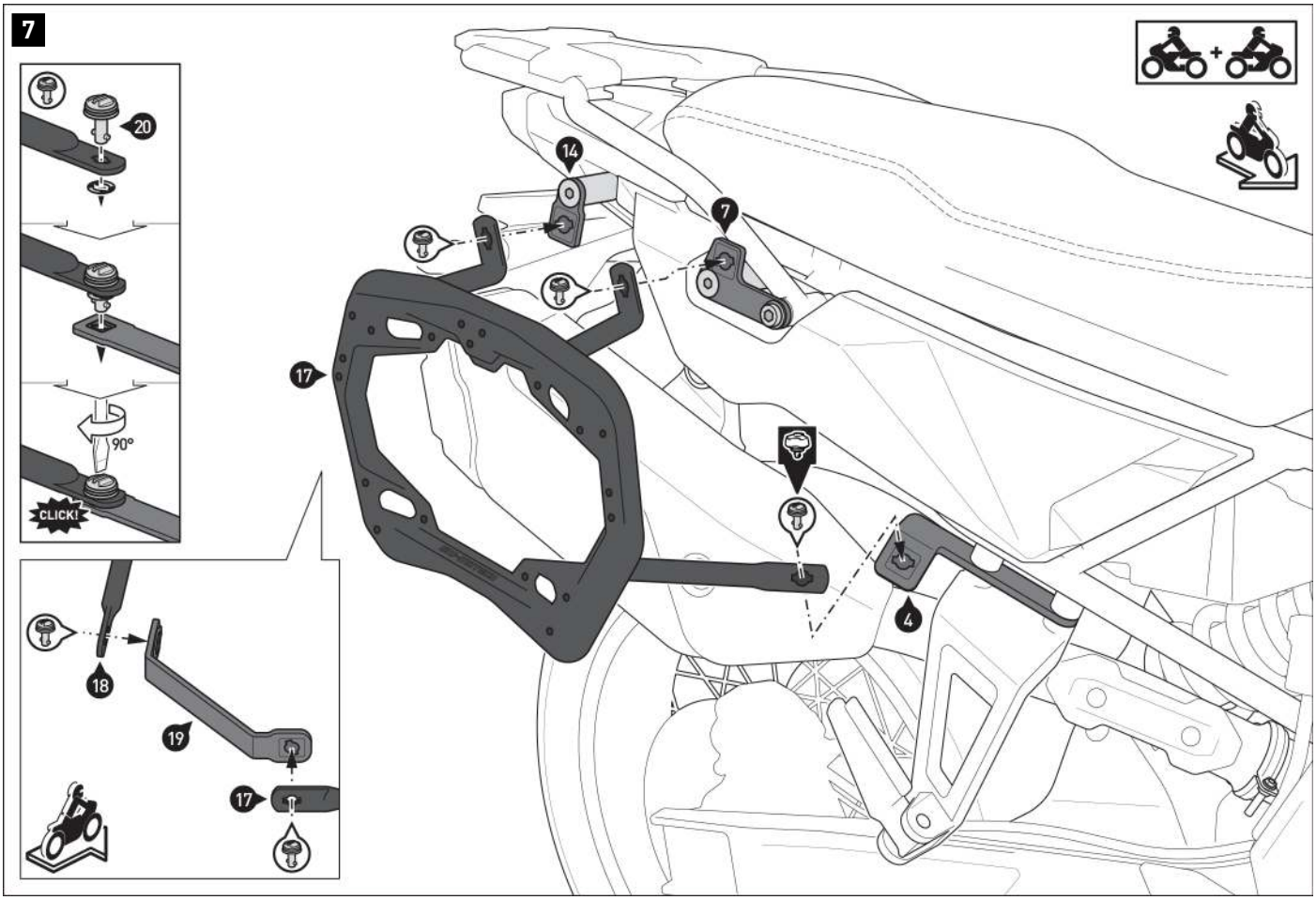

⚠ ***NOTE:*** *SW-MOTECH anti-theft protection is sold separately; mount the anti-theft protection onto* ***both sides*** *of the vehicle as indicated.*

⚠ ***NOTE:*** *Secure all quick-release fasteners (20) using the locking washers provided.*
Connect the side carriers (17/18) on **both sides** to mounting tabs (20), (4/5) and (7/8) using the quick-release fasteners (14).
Connect the side carriers (17/18) with the crossbar (19).

CFMOTO 1000 MT-X (25 –): After attaching the **right side carrier** (17), ensure that it does not come into contact with the exhaust system muffler. If the muffler does come into contact with the side carrier (17), realign it according to the vehicle manufacturer's specifications.

Once all components have been loosely attached, tighten the (9) screws according to the vehicle manufacturer's specifications.
Tighten screws (12) and (15) as specified in the mounting instructions.

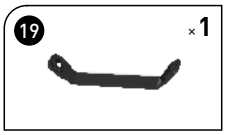

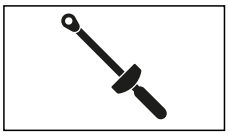

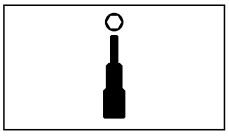

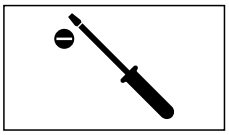

The content translation is automated.
© SW-MOTECH GmbH & Co. KG

Errors and omissions excepted
Subject to technical and design changes.

PRODUCT-SPECIFIC NOTES

⚠ DANGER: The specified maximum load includes the weight of the suitcase/luggage and adapter kit. The maximum load of the vehicle specified by the vehicle manufacturer applies.

≤ 12.5KG (≤ 27.5 lbs)	≤ 130 km/h (≤ 80 mph)

⚠ ***NOTE:*** *The side carriers were designed exclusively for use with SW-MOTECH adapter kits.*

⚠ ***NOTE:*** *Remove the side carriers when riding without luggage. Always use the side carriers in pairs.*

⚠ WARNING: Make sure that the cases are NOT in the exhaust gas stream after mounting them on the vehicle. Risk of burns!

⚠ ***NOTE:*** *Observe all country-specific regulations for the registration and operation of your vehicle as well as any applicable TÜV regulations. Have any parts requiring registration entered into your vehicle documents by your local inspection authority after they have been installed.*

© SW-MOTECH GmbH & Co. KG

Errors and omissions excepted
Subject to technical and design changes.

Item number: **KFT.00.152.36000**	Revision: **00** · Date: **08 - 2023**

Adapter kit for PRO side carrier

~ 0.25 h.	EASY DIFFICULT

ENGLISH ·Thank you for choosing this premium product from SW-MOTECH. Visit our online shop for more information (e.g. model assignments). Required documents (e.g. national type approval) are available there for you to download.
Please read and understand all the instructions, safety information and warnings in these mounting instructions before mounting and using the product in order to avoid injury and damage. Keep these mounting instructions for reference.
This product was developed for vehicles in factory condition. Compatibility with original accessories or accessories from other manufacturers cannot be guaranteed.
These mounting instructions have been prepared to the best of our current knowledge. No legal claims relating to accuracy can be made. Errors and omissions excepted. We reserve the right to make technical and design changes. The copyright is held by SW-MOTECH.

SAFETY WARNING SYMBOL

⚠ **This warning symbol is used in these mounting instructions to warn of deadly dangers, injuries or other hazards. The words DANGER, WARNING or CAUTION are used as part of this warning symbol to convey important safety messages and information relating to the installation and use of this product. These words, together with the safety warning symbol, mean:**

⚠ **DANGER:** Indicates a hazardous situation which, if not avoided, will result in death or serious injury!

⚠ **WARNING:** Indicates a hazardous situation which, if not avoided, may result in death or serious injury!

⚠ **CAUTION:** Indicates a hazardous situation which, if not avoided, may result in minor or moderate injury!

⚠ ***NOTE:*** Important information, but not relating to a risk of death or injury (property damage only)!

GENERAL INFORMATION

⚠ **WARNING: Assembly and/or maintenance of this product requires advanced technical skill, appropriate tools, and a good understanding of tool usage and torque specifications. For your own safety, SW-MOTECH recommends having the assembly and/or maintenance carried out by a qualified and certified motorcycle workshop.**

⚠ **WARNING: If you do choose to assemble this product yourself, carefully and fully read the mounting instructions before assembly and use, and follow all instructions to avoid serious injury or death. Also observe all relevant information in the vehicle manual when mounting or using the product. IF YOU DO NOT UNDERSTAND ANY PART OF THESE MOUNTING INSTRUCTIONS OR NEED AN EXPLANATION AS TO A SPECIFIC INSTRUCTION, DO NOT ATTEMPT TO INSTALL THIS PRODUCT WITHOUT CONSULTING SW-MOTECH FOR ASSISTANCE!**

PREPARATION: Read the mounting instructions carefully and make sure that all parts on the parts list are available.

⚠ **CAUTION: Ensure that your vehicle is standing securely. Switch off the engine and remove the ignition key. Allow the engine/exhaust to cool down if necessary. Disconnect the battery when working on the electrical system. Only use proper tools and always wear safety goggles and gloves during assembly and maintenance. Have a second person help you with assembly and maintenance.**

ASSEMBLY: All parts and connections removed from the vehicle must be reinstalled according to the vehicle manufacturer's specifications or replaced with parts and hardware supplied by SW-MOTECH.

⚠ **WARNING: Secure all threads with a medium-strength liquid threadlocker, unless otherwise specified.**

⚠ **DANGER: Tightening torques not defined by SW-MOTECH must be obtained from the vehicle manufacturer or a certified motorbike workshop.**

FUNCTIONAL CHECK: After mounting the product, ensure that no moving parts are obstructed and that the function of the vehicle is not impeded. Cables and hoses must not rub against each other and/or be hindered in any way.

⚠ **WARNING: Carry out a comprehensive functionality check before you start to drive. Check the tightening torque of all connections and the tight fit of the product after the first 50 km and then at regular intervals. Mounted accessories can change the handling and stability of the vehicle.**

SW-MOTECH GmbH & Co. KG
Ernteweg 7-10
35282 Rauschenberg
Germany

info@sw-motech.com
www.sw-motech.com

The content translation is automated.
© SW-MOTECH GmbH & Co. KG

Errors and omissions excepted
Subject to technical and design changes.

Take note of the symbols and what they mean in the ASSEMBLY section. If the term OEM appears in the ASSEMBLY section, the vehicle manufacturer's specifications must be observed and applied.

If you have any questions, please don't hesitate to contact our Customer Service team or our distributors. You can find our telephone number and a list of our distributors in our online shop:
www.sw-motech.com

Do not use thread lock: Indicates that no liquid thread lock should be used at this point.

Tighten/note the tightening torque information: Indicates the tightening torque of a part specified by SW-MOTECH or the vehicle manufacturer (OEM).

Use thread locker: Indicates that a thread must be coated with liquid thread locker. H (HIGH): high strength; M (MEDIUM): medium strength; L (LOW): low strength.

The content translation is automated.
© SW-MOTECH GmbH & Co. KG

Errors and omissions excepted
Subject to technical and design changes.

1

1	2	3	4	5	6
HSK.00.745.025.35GR	M6 x 12; ISO 7380 SC.ST.06.012.02.7380.109	GPT.00.152.010.35	M6 x 25; DIN 7991 SC.ST.06.025.02.7991.088	M6; DIN 6927 MU.ST.06.02.6927.08	KFT.00.152.026.02
2/2	**4**/4	**4**/4	**4**/4	**4**/4	**8**/8

The content translation is automated.
© SW-MOTECH GmbH & Co. KG

Errors and omissions excepted
Subject to technical and design changes.

1

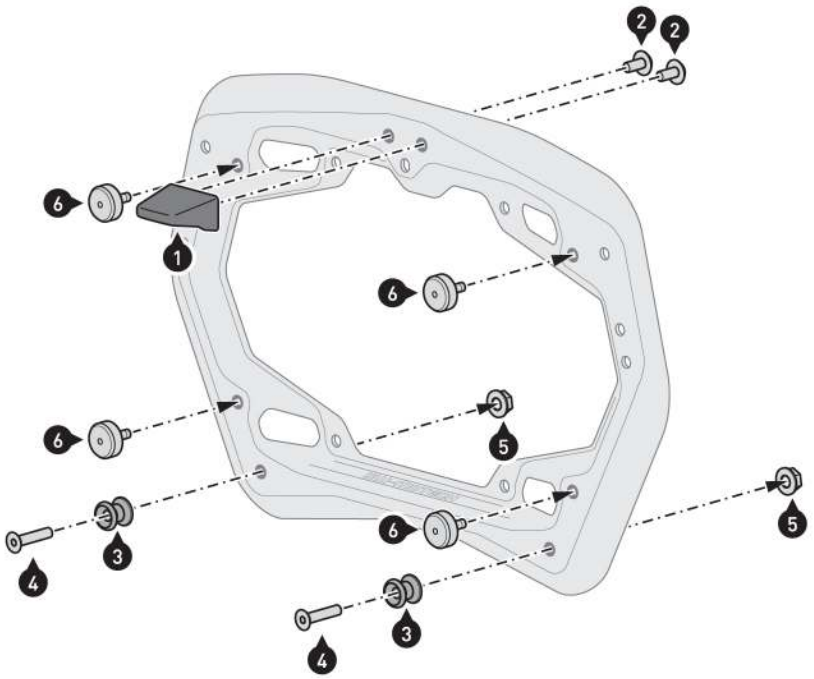

⚠ WARNING: Always wear eye and hand protection!
⚠ WARNING: Always use the proper tools!

⚠ ***NOTE:*** *The illustration shows how to mount on the right PRO side carrier. Follow the same steps with the left PRO side carrier as with the right PRO side carrier.*

Screw the parts indicated to your PRO side carriers (sold separately).
⚠ ATTENTION: Use liquid thread locker (screws (2) only)!
Tighten the screws as specified in the mounting instructions.

Then insert the rubber dampeners (6) into the indicated openings.

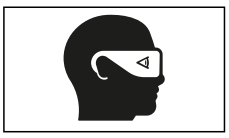

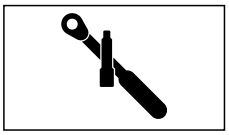

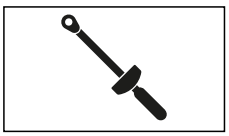

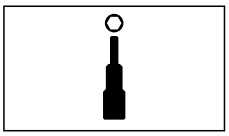

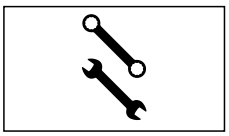

The content translation is automated.
© SW-MOTECH GmbH & Co. KG

Errors and omissions excepted
Subject to technical and design changes.

PRODUCT-SPECIFIC NOTES

⚠ ***NOTE***: *Observe the country-specific regulations for the registration/operation of your vehicle or applicable TÜV regulations. After assembly, have parts that are subject to registration entered in the vehicle documents by your test centre.*

© SW-MOTECH GmbH & Co. KG

Errors and omissions excepted
Subject to technical and design changes.

Item number: **GPT.10.625.19001/B**	Revision: **00** · Date: **10 - 2025**

ADVENTURE-RACK

~ 0.5 h.	EASY DIFFICULT

ENGLISH ·Thank you for choosing this premium product from SW-MOTECH. Visit our online shop for more information (e.g. model assignments). Required documents (e.g. national type approval) are available there for you to download.

Please read and understand all the instructions, safety information and warnings in these mounting instructions before mounting and using the product in order to avoid injury and damage. Keep these mounting instructions for reference.

This product was developed for vehicles in factory condition. Compatibility with original accessories or accessories from other manufacturers cannot be guaranteed.

These mounting instructions have been prepared to the best of our current knowledge. No legal claims relating to accuracy can be made. Errors and omissions excepted. We reserve the right to make technical and design changes. The copyright is held by SW-MOTECH.

SAFETY WARNING SYMBOL

⚠ **This warning symbol is used in these mounting instructions to warn of deadly dangers, injuries or other hazards. The words DANGER, WARNING or CAUTION are used as part of this warning symbol to convey important safety messages and information relating to the installation and use of this product. These words, together with the safety warning symbol, mean:**

⚠ **DANGER:** Indicates a hazardous situation which, if not avoided, will result in death or serious injury!

⚠ **WARNING:** Indicates a hazardous situation which, if not avoided, may result in death or serious injury!

⚠ **CAUTION:** Indicates a hazardous situation which, if not avoided, may result in minor or moderate injury!

⚠ ***NOTE:*** Important information, but not relating to a risk of death or injury (property damage only)!

GENERAL INFORMATION

⚠ **WARNING: Assembly and/or maintenance of this product requires advanced technical skill, appropriate tools, and a good understanding of tool usage and torque specifications. For your own safety, SW-MOTECH recommends having the assembly and/or maintenance carried out by a qualified and certified motorcycle workshop.**

⚠ **WARNING: If you do choose to assemble this product yourself, carefully and fully read the mounting instructions before assembly and use, and follow all instructions to avoid serious injury or death. Also observe all relevant information in the vehicle manual when mounting or using the product. IF YOU DO NOT UNDERSTAND ANY PART OF THESE MOUNTING INSTRUCTIONS OR NEED AN EXPLANATION AS TO A SPECIFIC INSTRUCTION, DO NOT ATTEMPT TO INSTALL THIS PRODUCT WITHOUT CONSULTING SW-MOTECH FOR ASSISTANCE!**

PREPARATION: Read the mounting instructions carefully and make sure that all parts on the parts list are available.

⚠ **CAUTION: Ensure that your vehicle is standing securely. Switch off the engine and remove the ignition key. Allow the engine/exhaust to cool down if necessary. Disconnect the battery when working on the electrical system. Only use proper tools and always wear safety goggles and gloves during assembly and maintenance. Have a second person help you with assembly and maintenance.**

ASSEMBLY: All parts and connections removed from the vehicle must be reinstalled according to the vehicle manufacturer's specifications or replaced with parts and hardware supplied by SW-MOTECH.

⚠ **WARNING: Secure all threads with a medium-strength liquid threadlocker, unless otherwise specified.**

⚠ **DANGER: Tightening torques not defined by SW-MOTECH must be obtained from the vehicle manufacturer or a certified motorbike workshop.**

FUNCTIONAL CHECK: After mounting the product, ensure that no moving parts are obstructed and that the function of the vehicle is not impeded. Cables and hoses must not rub against each other and/or be hindered in any way.

⚠ **WARNING: Carry out a comprehensive functionality check before you start to drive. Check the tightening torque of all connections and the tight fit of the product after the first 50 km and then at regular intervals. Mounted accessories can change the handling and stability of the vehicle.**

SW-MOTECH GmbH & Co. KG
Ernteweg 7-10
35282 Rauschenberg
Germany

info@sw-motech.com
www.sw-motech.com

The content translation is automated.
© SW-MOTECH GmbH & Co. KG

Errors and omissions excepted
Subject to technical and design changes.

Take note of the symbols and what they mean in the ASSEMBLY section. If the term OEM appears in the ASSEMBLY section, the vehicle manufacturer's specifications must be observed and applied.

If you have any questions, please don't hesitate to contact our Customer Service team or our distributors. You can find our telephone number and a list of our distributors in our online shop:
www.sw-motech.com

Use thread locker: Indicates that a thread must be coated with liquid thread locker. H (HIGH): high strength; M (MEDIUM): medium strength; L (LOW): low strength.

Tighten/note the tightening torque information: Indicates the tightening torque of a part specified by SW-MOTECH or the vehicle manufacturer (OEM).

The content translation is automated.
© SW-MOTECH GmbH & Co. KG

Errors and omissions excepted
Subject to technical and design changes.

3

1	2	3	4	5	6
GPT.10.625.001.11	M8 x 50; DIN 7991 SC.ST.08.050.02.7991.088	Ø 16 / ø 8,4 / h 28 DB.ST.0160.0084.0280.48	M8 x 30; DIN 7991 SC.ST.08.030.02.7991.088	M8 x 35; DIN 7991 SC.ST.08.035.02.7991.088	Ø 16 / ø 8,4 / h 17 DB.ST.0160.0084.0170.48
1/1	**2**/2	**2**/2	**2**/2	**2**/2	**2**/2

4

7	8	9
GPT.00.152.002.11	M6 x 16; ISO 7380 SC.ST.06.016.02.7380.109	ø 6.4; DIN 9021 US.ST.064.02.9021
1/1	**4**/4	**4**/4

The content translation is automated.
© SW-MOTECH GmbH & Co. KG

Errors and omissions excepted
Subject to technical and design changes.

1

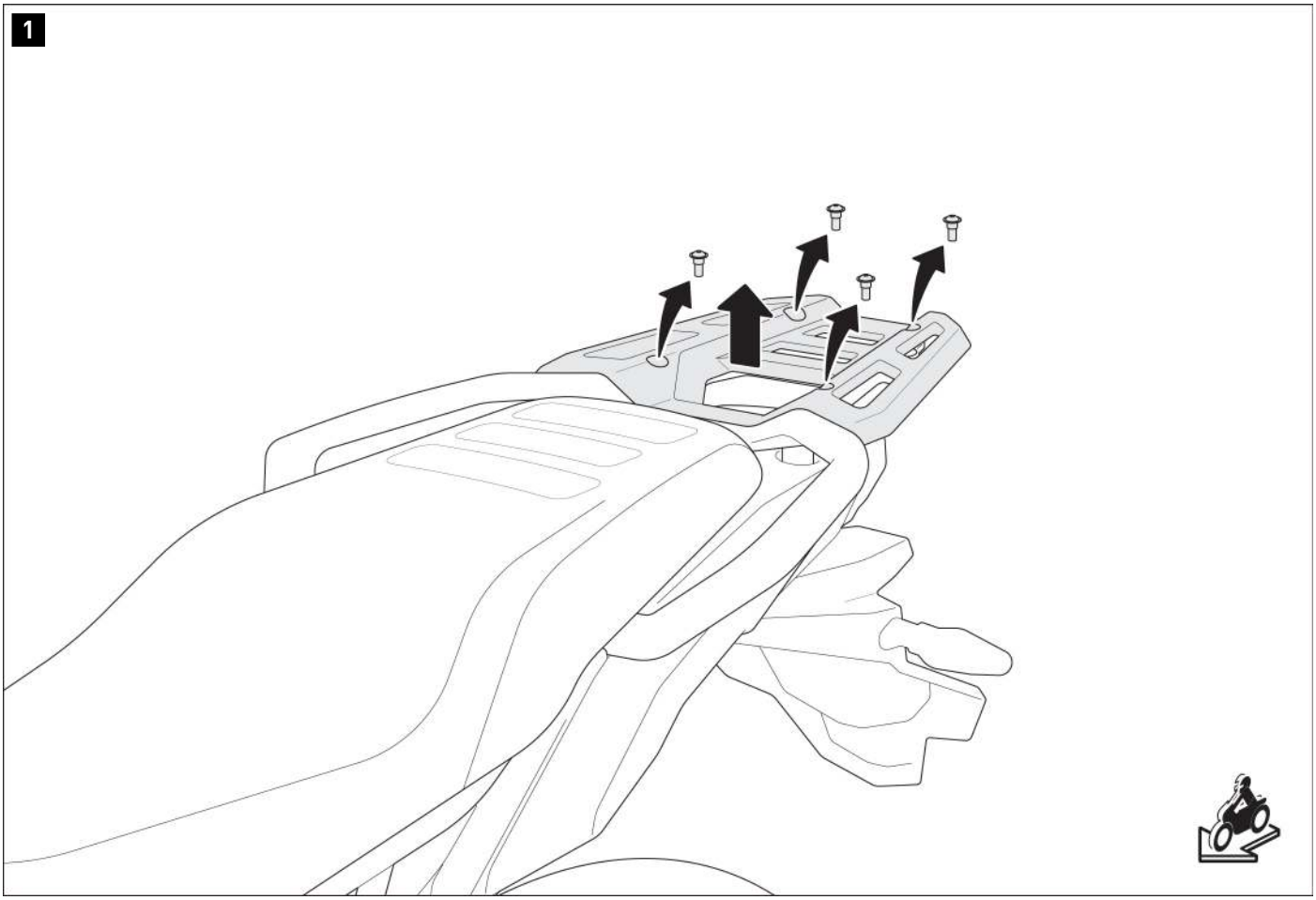

⚠ WARNING: Always wear eye and hand protection!
⚠ WARNING: Always use suitable tools!

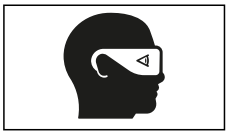

Remove the original screws of the luggage rack cover; remove the luggage rack cover from the vehicle.

© SW-MOTECH GmbH & Co. KG

Errors and omissions excepted
Subject to technical and design changes.

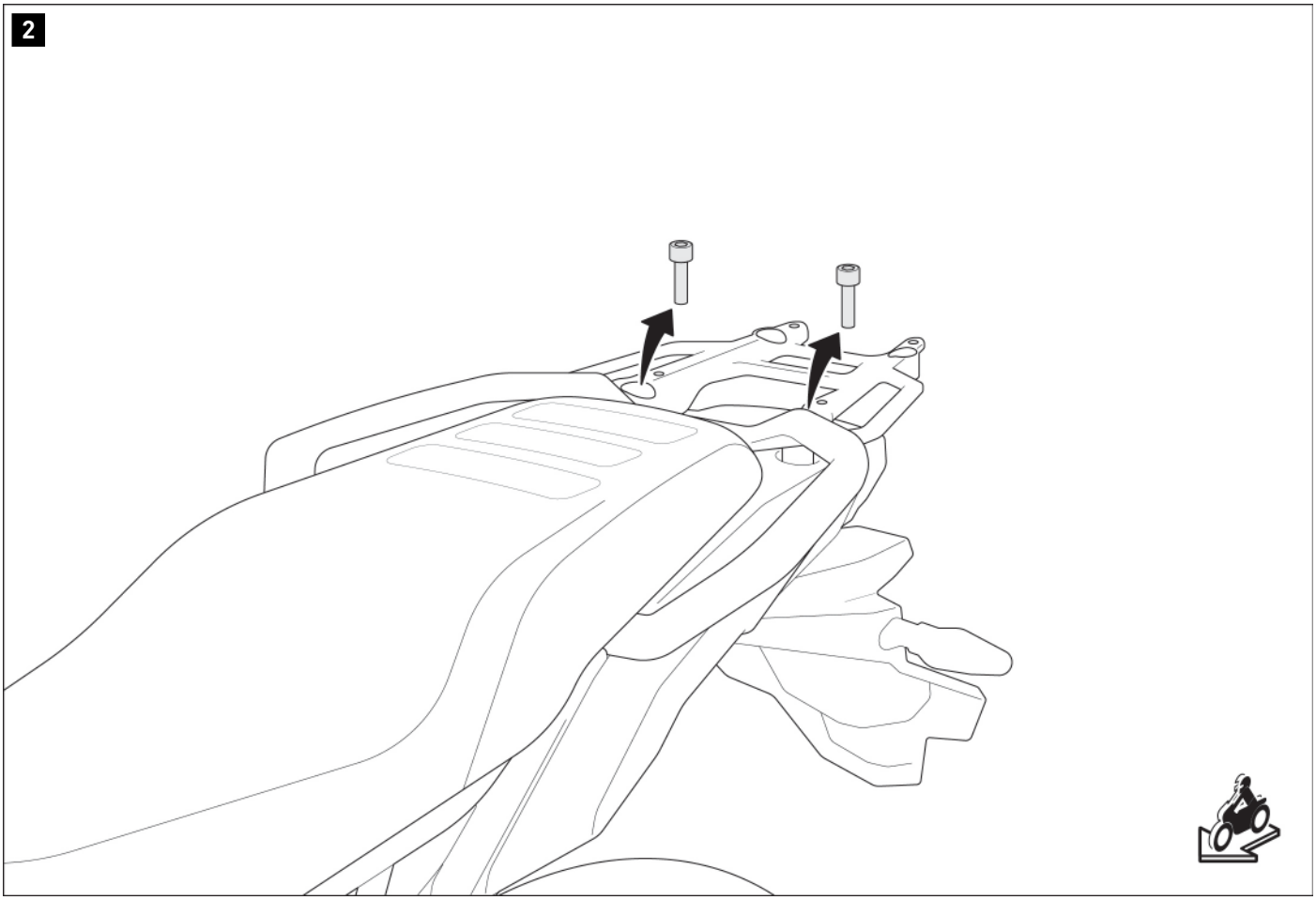

Remove the original screws shown from the luggage rack.

The content translation is automated.
© SW-MOTECH GmbH & Co. KG

Errors and omissions excepted
Subject to technical and design changes.

3

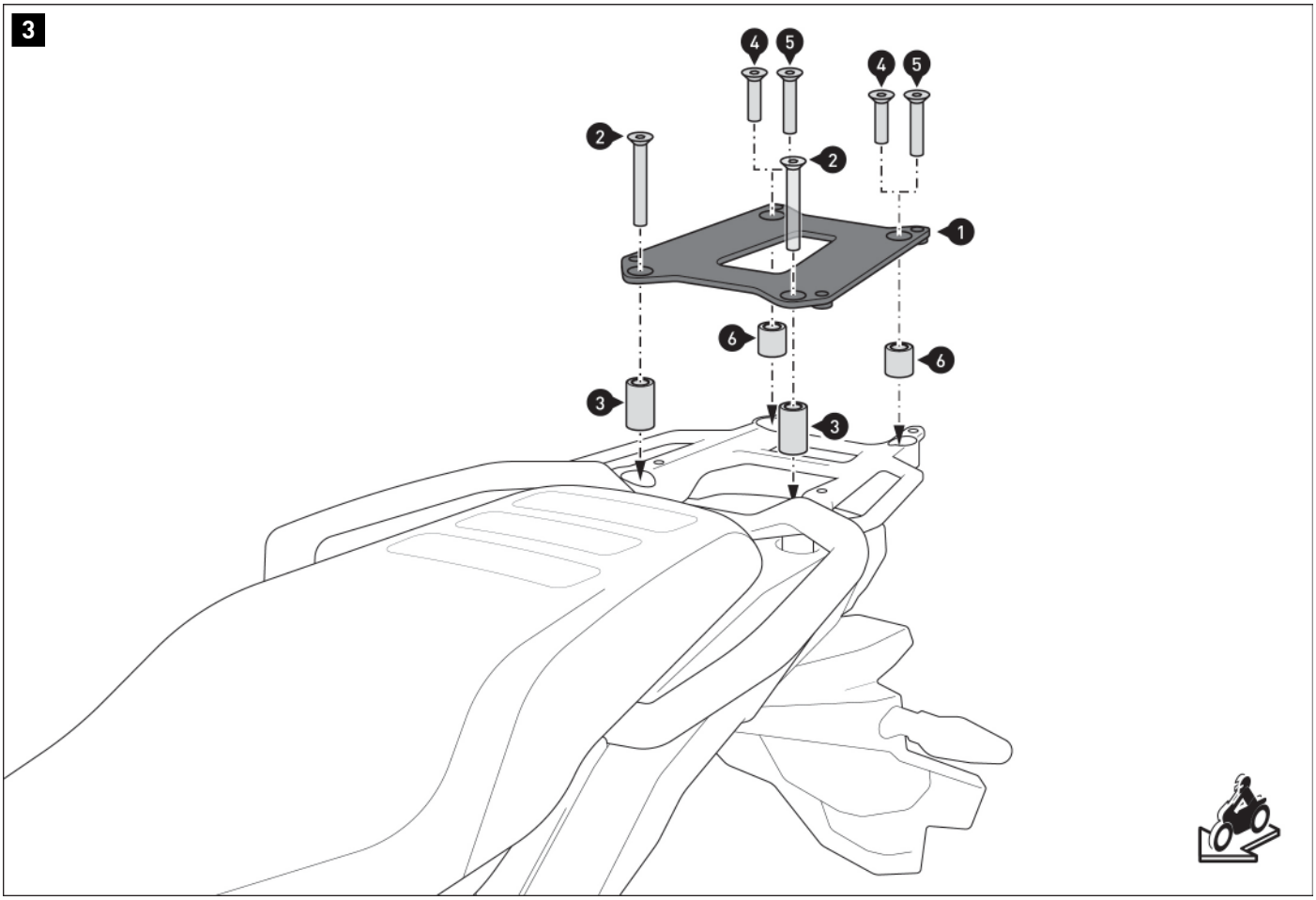

⚠ ***NOTE:*** *When screwing to the* ***rear*** *mounting points, use the designated screws.*
CF Moto 450 MT: *screws (4)*
CF Moto 800 MT-X: *screws (5)*

Mount the mounting bracket (1) on the luggage rack.
⚠ WARNING: Use liquid threadlocker!
Tighten the screws (2) according to the vehicle manufacturer's specifications.
Tighten the screws (4)/(5) as specified in the mounting instructions.

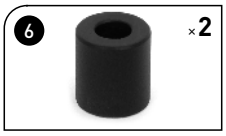

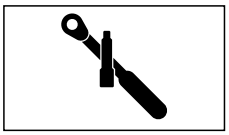

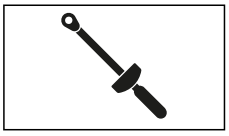

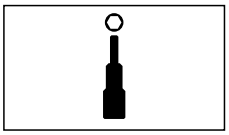

© SW-MOTECH GmbH & Co. KG

Errors and omissions excepted
Subject to technical and design changes.

4

⚠ ***NOTE:*** *Screw the luggage carrier (7) to the marked mounting position depending on the space available **(A)** or **(B)** as shown in the detailed drawing.*

Mount the luggage rack (7) on the mounting bracket (1).
⚠ WARNING: Use liquid threadlocker!
Tighten the screws (8) as specified in the mounting instructions.

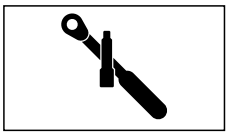

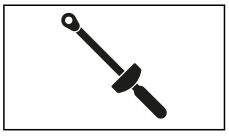

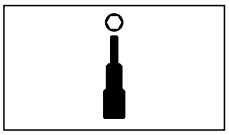

© SW-MOTECH GmbH & Co. KG

Errors and omissions excepted
Subject to technical and design changes.

PRODUCT-SPECIFIC NOTES

⚠ **WARNING: The specified maximum load includes the weight of the suitcase/luggage and adapter plate/adapter kit. The maximum load of the vehicle specified by the bike manufacturer applies.**

≤ 12 KG (≤ 26 lbs)	≤ 130 km/h (≤ 80 mph)

⚠ ***A NOTICE:****Observe all country-specific regulations for the registration and operation of your vehicle as well as any applicable TÜV regulations. Have any parts requiring registration entered into your vehicle documents by your vehicle inspection authority after they have been installed .*

© SW-MOTECH GmbH & Co. KG

Errors and omissions excepted
Subject to technical and design changes.

Item number: **GPT.00.152.36200/B**	Revision: **00** · Date: **08 - 2023**

Adapter kit for ADVENTURE-RACK

~ 0.25 h.	EASY DIFFICULT

ENGLISH ·Thank you for choosing this premium product from SW-MOTECH. Visit our online shop for more information (e.g. model assignments). Required documents (e.g. national type approval) are available there for you to download.
Please read and understand all the instructions, safety information and warnings in these mounting instructions before mounting and using the product in order to avoid injury and damage. Keep these mounting instructions for reference.
This product was developed for vehicles in factory condition. Compatibility with original accessories or accessories from other manufacturers cannot be guaranteed.
These mounting instructions have been prepared to the best of our current knowledge. No legal claims relating to accuracy can be made. Errors and omissions excepted. We reserve the right to make technical and design changes. The copyright is held by SW-MOTECH.

SAFETY WARNING SYMBOL

⚠ **This warning symbol is used in these mounting instructions to warn of deadly dangers, injuries or other hazards. The words DANGER, WARNING or CAUTION are used as part of this warning symbol to convey important safety messages and information relating to the installation and use of this product. These words, together with the safety warning symbol, mean:**

⚠ **DANGER:** Indicates a hazardous situation which, if not avoided, will result in death or serious injury!

⚠ **WARNING:** Indicates a hazardous situation which, if not avoided, may result in death or serious injury!

⚠ **CAUTION:** Indicates a hazardous situation which, if not avoided, may result in minor or moderate injury!

⚠ ***NOTE:*** Important information, but not relating to a risk of death or injury (property damage only)!

GENERAL INFORMATION

⚠ **WARNING: Assembly and/or maintenance of this product requires advanced technical skill, appropriate tools, and a good understanding of tool usage and torque specifications. For your own safety, SW-MOTECH recommends having the assembly and/or maintenance carried out by a qualified and certified motorcycle workshop.**

⚠ **WARNING: If you do choose to assemble this product yourself, carefully and fully read the mounting instructions before assembly and use, and follow all instructions to avoid serious injury or death. Also observe all relevant information in the vehicle manual when mounting or using the product. IF YOU DO NOT UNDERSTAND ANY PART OF THESE MOUNTING INSTRUCTIONS OR NEED AN EXPLANATION AS TO A SPECIFIC INSTRUCTION, DO NOT ATTEMPT TO INSTALL THIS PRODUCT WITHOUT CONSULTING SW-MOTECH FOR ASSISTANCE!**

PREPARATION: Read the mounting instructions carefully and make sure that all parts on the parts list are available.

⚠ **CAUTION: Ensure that your vehicle is standing securely. Switch off the engine and remove the ignition key. Allow the engine/exhaust to cool down if necessary. Disconnect the battery when working on the electrical system. Only use proper tools and always wear safety goggles and gloves during assembly and maintenance. Have a second person help you with assembly and maintenance.**

ASSEMBLY: All parts and connections removed from the vehicle must be reinstalled according to the vehicle manufacturer's specifications or replaced with parts and hardware supplied by SW-MOTECH.

⚠ **WARNING: Secure all threads with a medium-strength liquid threadlocker, unless otherwise specified.**

⚠ **DANGER: Tightening torques not defined by SW-MOTECH must be obtained from the vehicle manufacturer or a certified motorbike workshop.**

FUNCTIONAL CHECK: After mounting the product, ensure that no moving parts are obstructed and that the function of the vehicle is not impeded. Cables and hoses must not rub against each other and/or be hindered in any way.

⚠ **WARNING: Carry out a comprehensive functionality check before you start to drive. Check the tightening torque of all connections and the tight fit of the product after the first 50 km and then at regular intervals. Mounted accessories can change the handling and stability of the vehicle.**

SW-MOTECH GmbH & Co. KG
Ernteweg 7-10
35282 Rauschenberg
Germany

info@sw-motech.com
www.sw-motech.com

The content translation is automated.
© SW-MOTECH GmbH & Co. KG

Errors and omissions excepted
Subject to technical and design changes.

Take note of the symbols and what they mean in the ASSEMBLY section. If the term OEM appears in the ASSEMBLY section, the vehicle manufacturer's specifications must be observed and applied.

If you have any questions, please don't hesitate to contact our Customer Service team or our distributors. You can find our telephone number and a list of our distributors in our online shop:
www.sw-motech.com

Use thread locker: Indicates that a thread must be coated with liquid thread locker. H (HIGH): high strength; M (MEDIUM): medium strength; L (LOW): low strength.

Tighten/note the tightening torque information: Indicates the tightening torque of a part specified by SW-MOTECH or the vehicle manufacturer (OEM).

The content translation is automated.
© SW-MOTECH GmbH & Co. KG

Errors and omissions excepted
Subject to technical and design changes.

1

1	2	3	4	5
HSK.00.745.025.35GR	M6 x 14; ISO 7380 SC.ST.06.014.02.7380.109	GPT.00.152.035.02	GPT.00.152.010.35	M6 x 25; DIN 7991 SC.ST.06.025.02.7991.088
1/1	**2**/2	**4**/4	**2**/2	**2**/2

The content translation is automated.
© SW-MOTECH GmbH & Co. KG

Errors and omissions excepted
Subject to technical and design changes.

1

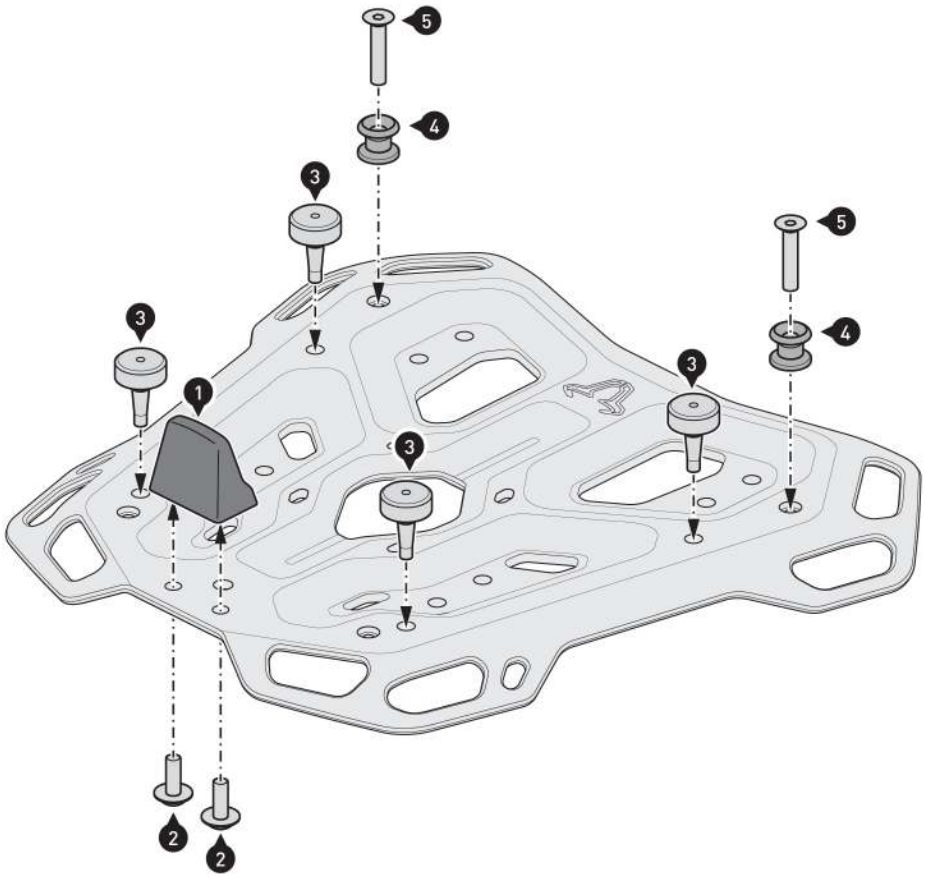

⚠ WARNING: Always wear eye and hand protection!
⚠ WARNING: Always use the proper tools!

Mount the parts shown to your rack.
⚠ WARNING: Use a liquid threadlocker!
Tighten the screws as specified in the mounting instructions.

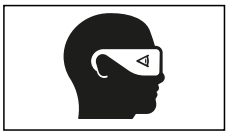

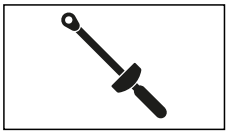

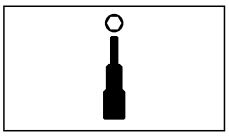

The content translation is automated.
© SW-MOTECH GmbH & Co. KG

Errors and omissions excepted
Subject to technical and design changes.

PRODUCT-SPECIFIC NOTES

⚠ ***NOTE***: *Observe the country-specific regulations for the registration/operation of your vehicle or applicable TÜV regulations. After assembly, have parts that are subject to registration entered in the vehicle documents by your test centre.*

© SW-MOTECH GmbH & Co. KG

Errors and omissions excepted
Subject to technical and design changes.

Item number: **HSK.00.745.10001/B**	Revision: **00** · Date: **02 - 2025**

DUSC M

~ 0.25 h.	EASY DIFFICULT

ENGLISH ·Thank you for choosing this premium product from SW-MOTECH. Visit our online shop for more information (e.g. model assignments). Required documents (e.g. national type approval) are available there for you to download.
Please read and understand all the instructions, safety information and warnings in these mounting instructions before mounting and using the product in order to avoid injury and damage. Keep these mounting instructions for reference.
This product was developed for vehicles in factory condition. Compatibility with original accessories or accessories from other manufacturers cannot be guaranteed.
These mounting instructions have been prepared to the best of our current knowledge. No legal claims relating to accuracy can be made. Errors and omissions excepted. We reserve the right to make technical and design changes. The copyright is held by SW-MOTECH.

SAFETY WARNING SYMBOL

⚠ **This warning symbol is used in these mounting instructions to warn of deadly dangers, injuries or other hazards. The words DANGER, WARNING or CAUTION are used as part of this warning symbol to convey important safety messages and information relating to the installation and use of this product. These words, together with the safety warning symbol, mean:**

⚠ **DANGER:** Indicates a hazardous situation which, if not avoided, will result in death or serious injury!

⚠ **WARNING:** Indicates a hazardous situation which, if not avoided, may result in death or serious injury!

⚠ **CAUTION:** Indicates a hazardous situation which, if not avoided, may result in minor or moderate injury!

⚠ ***NOTE:*** Important information, but not relating to a risk of death or injury (property damage only)!

GENERAL INFORMATION

⚠ **WARNING: Assembly and/or maintenance of this product requires advanced technical skill, appropriate tools, and a good understanding of tool usage and torque specifications. For your own safety, SW-MOTECH recommends having the assembly and/or maintenance carried out by a qualified and certified motorcycle workshop.**

⚠ **WARNING: If you do choose to assemble this product yourself, carefully and fully read the mounting instructions before assembly and use, and follow all instructions to avoid serious injury or death. Also observe all relevant information in the vehicle manual when mounting or using the product. IF YOU DO NOT UNDERSTAND ANY PART OF THESE MOUNTING INSTRUCTIONS OR NEED AN EXPLANATION AS TO A SPECIFIC INSTRUCTION, DO NOT ATTEMPT TO INSTALL THIS PRODUCT WITHOUT CONSULTING SW-MOTECH FOR ASSISTANCE!**

PREPARATION: Read the mounting instructions carefully and make sure that all parts on the parts list are available.

⚠ **CAUTION: Ensure that your vehicle is standing securely. Switch off the engine and remove the ignition key. Allow the engine/exhaust to cool down if necessary. Disconnect the battery when working on the electrical system. Only use proper tools and always wear safety goggles and gloves during assembly and maintenance. Have a second person help you with assembly and maintenance.**

ASSEMBLY: All parts and connections removed from the vehicle must be reinstalled according to the vehicle manufacturer's specifications or replaced with parts and hardware supplied by SW-MOTECH.

⚠ **WARNING: Secure all threads with a medium-strength liquid threadlocker, unless otherwise specified.**

⚠ **DANGER: Tightening torques not defined by SW-MOTECH must be obtained from the vehicle manufacturer or a certified motorbike workshop.**

FUNCTIONAL CHECK: After mounting the product, ensure that no moving parts are obstructed and that the function of the vehicle is not impeded. Cables and hoses must not rub against each other and/or be hindered in any way.

⚠ **WARNING: Carry out a comprehensive functionality check before you start to drive. Check the tightening torque of all connections and the tight fit of the product after the first 50 km and then at regular intervals. Mounted accessories can change the handling and stability of the vehicle.**

SW-MOTECH GmbH & Co. KG
Ernteweg 7-10
35282 Rauschenberg
Germany

info@sw-motech.com
www.sw-motech.com

The content translation is automated.
© SW-MOTECH GmbH & Co. KG

Errors and omissions excepted
Subject to technical and design changes.

Take note of the symbols and what they mean in the ASSEMBLY section. If the term OEM appears in the ASSEMBLY section, the vehicle manufacturer's specifications must be observed and applied.

If you have any questions, please don't hesitate to contact our Customer Service team or our distributors. You can find our telephone number and a list of our distributors in our online shop:
www.sw-motech.com

Do not use thread lock: Indicates that no liquid thread lock should be used at this point.

Tighten by hand: Indicates that the attachment must be carefully tightened by hand.

© SW-MOTECH GmbH & Co. KG

Errors and omissions excepted
Subject to technical and design changes.

1

1

HSK.00.745.80000/B

1/1

2

2

HSK.00.745.027.02

2/2

3

3

HSK.00.745.047.02

1/1

4

4 x 10; WN 1452

SC.ST.040.010.48.1452.109

2/2

5

T20

TRX.T20

1/1

© SW-MOTECH GmbH & Co. KG

Errors and omissions excepted
Subject to technical and design changes.

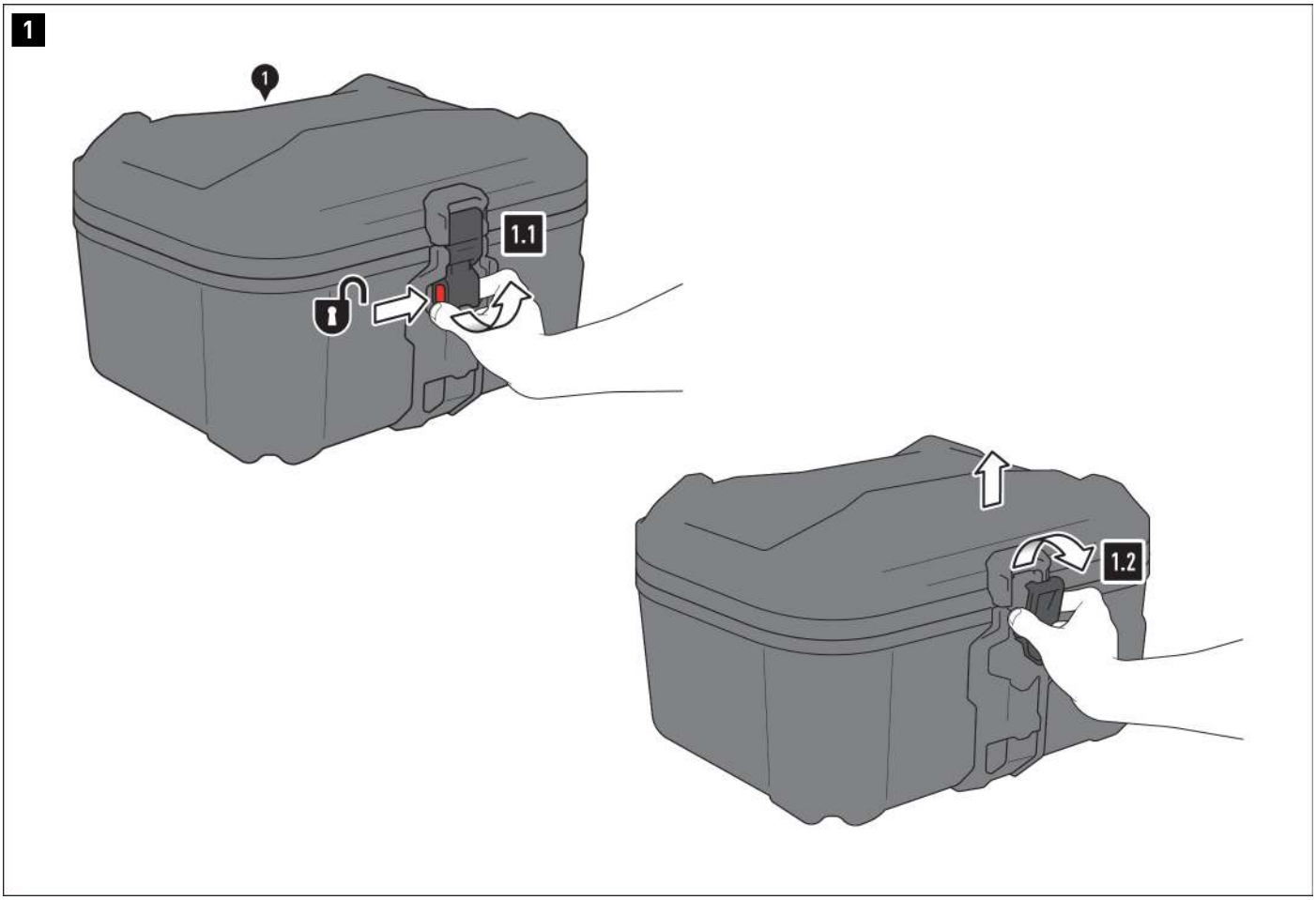

⚠ WARNING: Always wear eye and hand protection!
⚠ WARNING: Always use the proper tools!

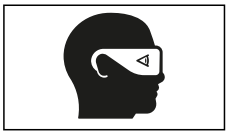

Opening the lid

1.1 - Press the DUSC release button (1) and pull the lid latch buckle to the open position.

1.2 - Remove the latch buckle from the corresponding bracket and open the lid.

© SW-MOTECH GmbH & Co. KG

Errors and omissions excepted
Subject to technical and design changes.

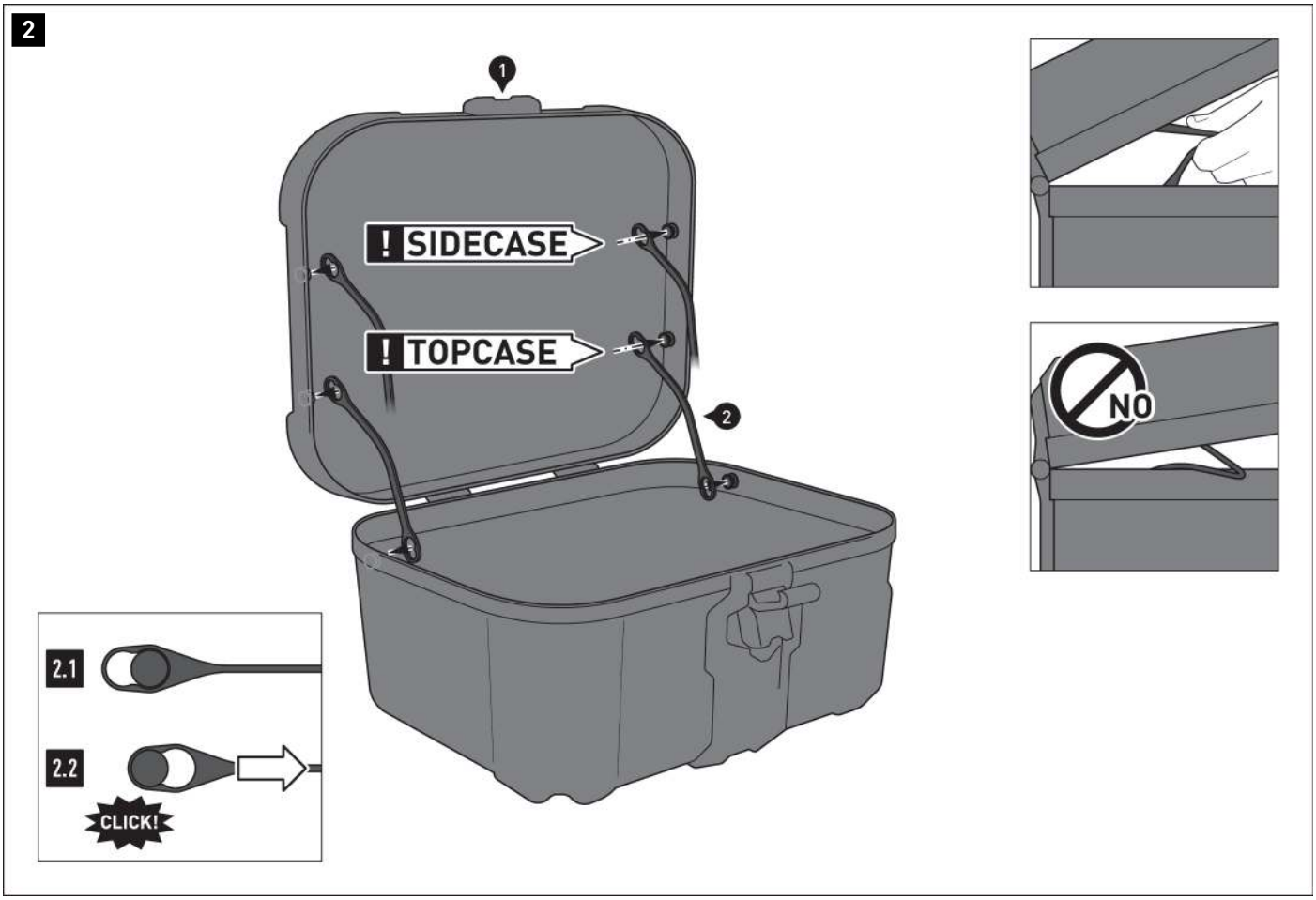

Installing the lid limiter

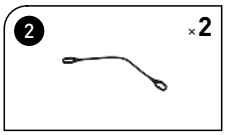

2.1 - Place the lid limiters (2) with the large openings on the mushroom-shaped supports provided
⚠ ***NOTE:*** *Pay attention to the proper use of the DUSC (1):**top case** or **side case**. Fasten the lid limiters (2) to the respective mushroom-shaped DUSC (1).*

2.2 - Pull the lid limiters (2) into fixed position.

⚠ ***NOTE:*** *Before closing the lid for the first time, the lid limiters (2) must be slightly compressed. When closing the lid, make sure that the lid limiters (2) are not trapped between the lid and the case body.*

© SW-MOTECH GmbH & Co. KG

Errors and omissions excepted
Subject to technical and design changes.

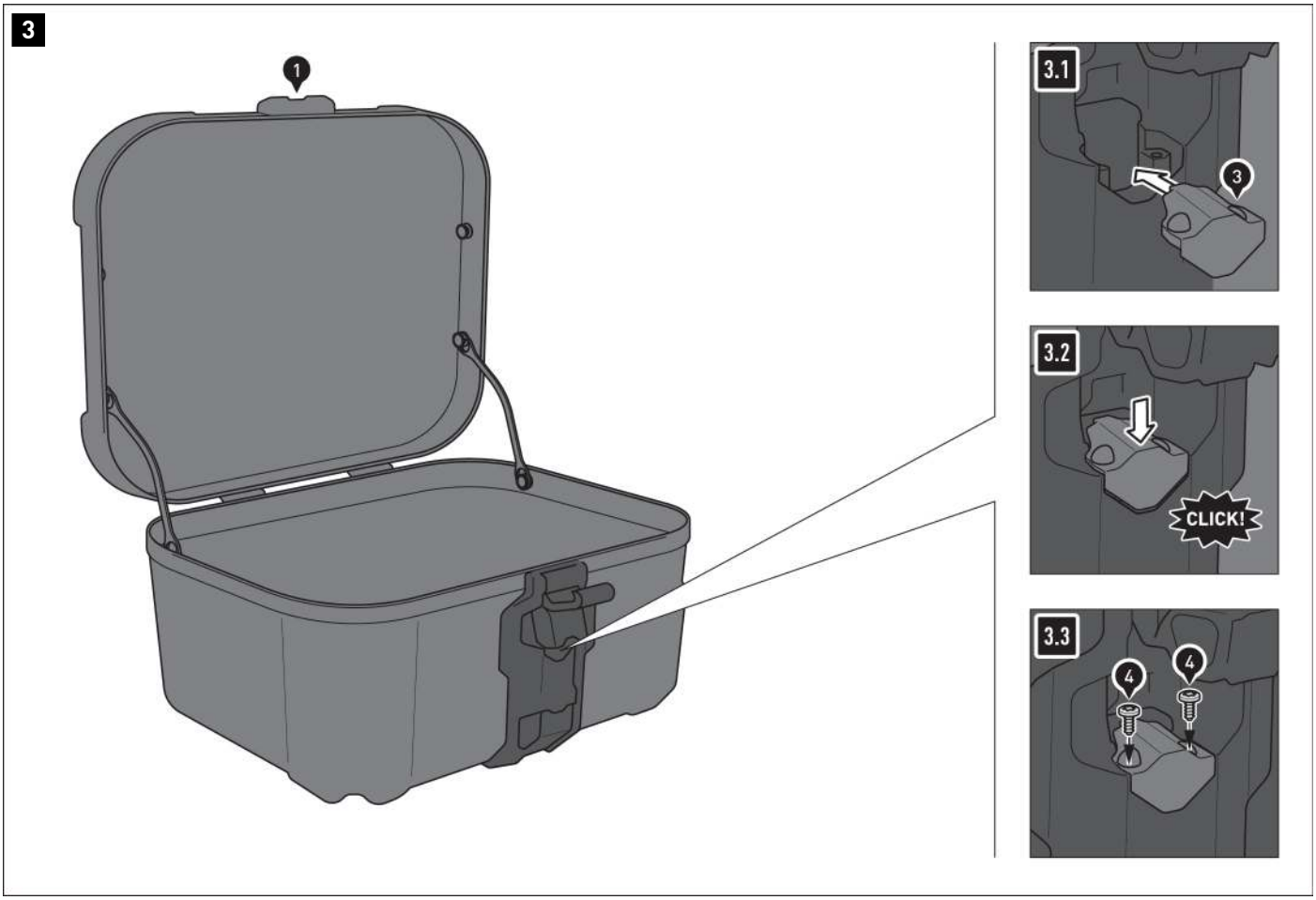

Installing lock casing connector

⚠ ***NOTE:*** *If you have opted for the DUSC lock set, this step is not necessary. Install the lock set instead.*

3.1 - Open the DUSC latch buckle (1) and position the latch housing connector (3) as shown.

3.2 - Push the latch housing connector (3) down until it clicks into place.

3.3 - Screw in the latch housing connector (3) using the screws (4) and the torx key (5). Carefully tighten the screws by hand.
⚠ WARNING: Over-tightening the screws may damage the lock casing!

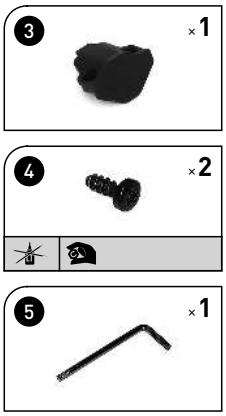

© SW-MOTECH GmbH & Co. KG

Errors and omissions excepted
Subject to technical and design changes.

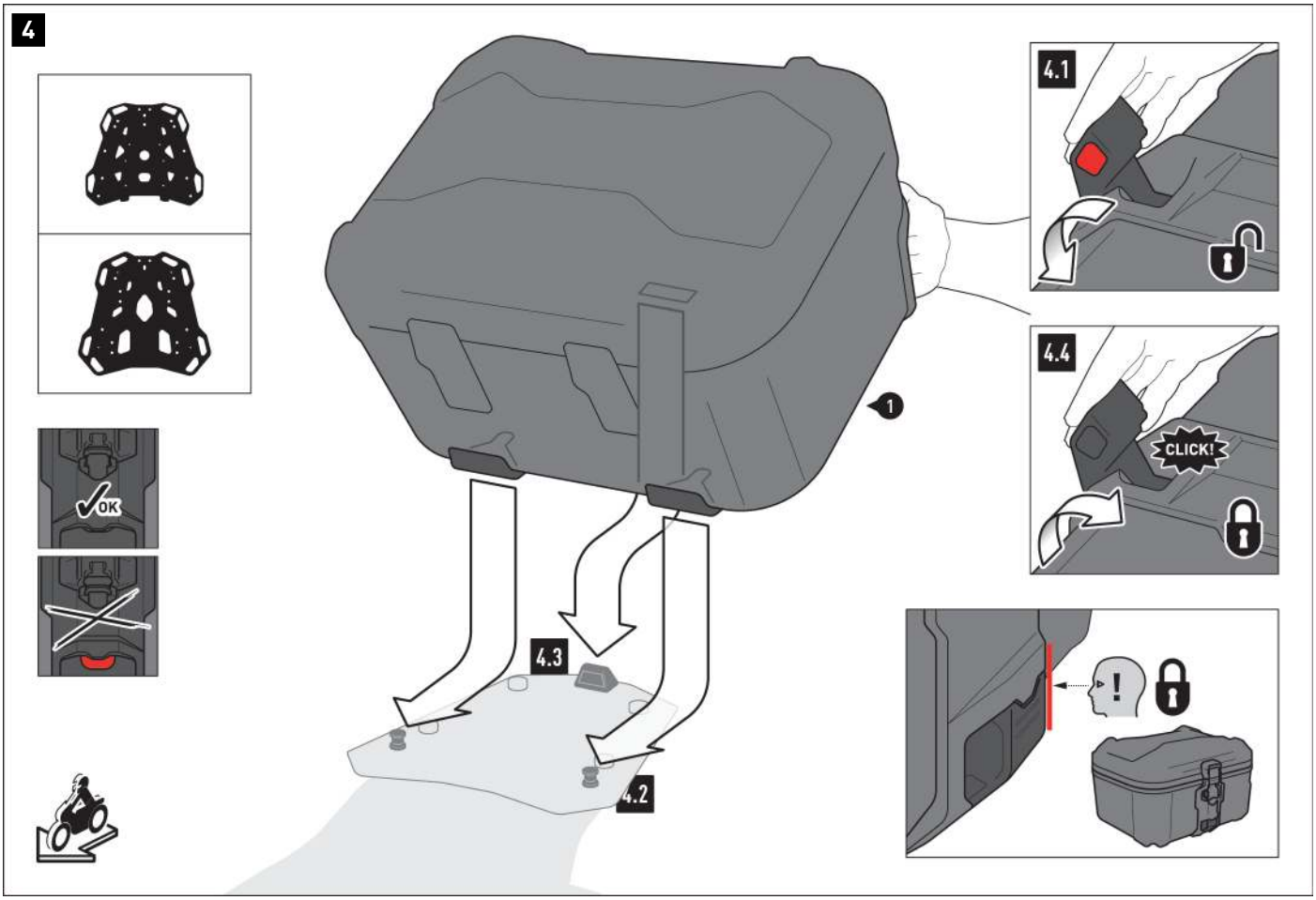

Attaching the DUSC to a top case

⚠ ***NOTE:*** *Prior to fastening, ensure that the lock (DUSC lock set) is in the open position (if applicable); see detailed drawings on the left!*

4.1 - Press the DUSC release button (1) and pull the fastening system latch buckle to the open position.

4.2 - Press the DUSC (1) with the two locking openings onto the mushroom-shaped supports of your SW-MOTECH rack.

4.3 - Press the DUSC (1) with the locking opening onto the locking lug of your SW-MOTECH rack.

4.4 - Press the system latch buckle to closed position.
⚠ WARNING: You should be able to hear a clicking sound!
⚠ WARNING: Check that the DUSC is firmly in place! Make sure that the latch buckle is flush with the latch buckle case!

⚠ WARNING: Make sure that no components of the DUSC (1) can come into contact with any hot and moving parts on the vehicle!
Also ensure that all components are at least 5 cm away from hot parts as well as hot gas coming from the exhaust!
After assembly, make sure that this distance is maintained in all vehicle positions!

The content translation is automated.
© SW-MOTECH GmbH & Co. KG

Errors and omissions excepted
Subject to technical and design changes.

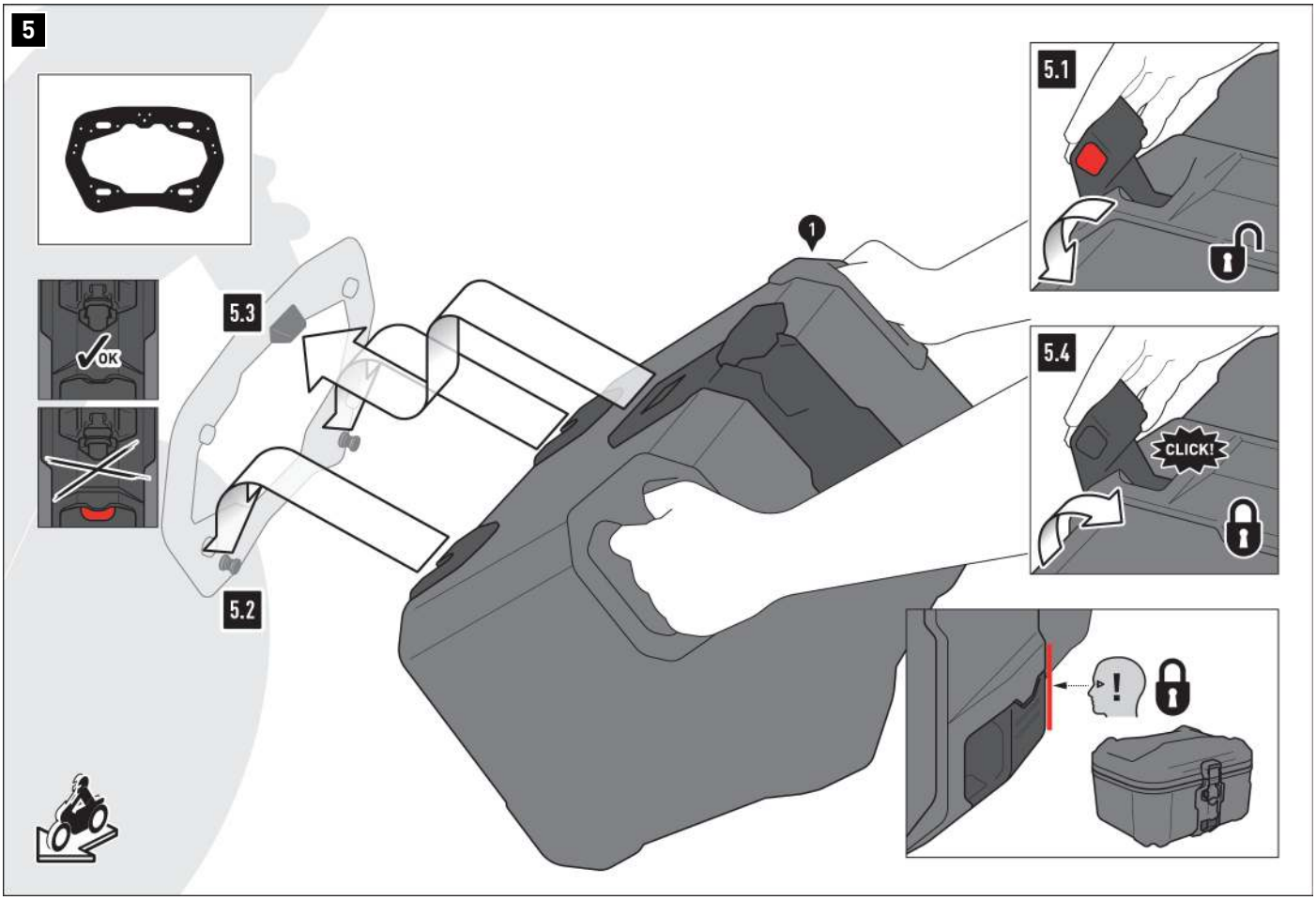

Attaching the DUSC to a side case

⚠ ***NOTE:*** *Prior to fastening, ensure that the lock (DUSC lock set) is in the open position (if applicable); see detailed drawings on the left!*

5.1 - Press the DUSC release button (1) and pull the system latch buckle to the open position.

5.2 - Slide the DUSC (1) with the two locking openings onto the mushroom-shaped supports of your SW-MOTECH side carrier.

5.3 - Press the DUSC (1) with the locking opening onto the locking lug of your SW-MOTECH side carrier.

5.4 - Press the system latch buckle to closed position.
⚠ WARNING: Make sure you hear it clicking into place!
⚠ WARNING: Check that the DUSC is firmly in place! Make sure that the latch buckle is flush with the latch buckle case!

⚠ WARNING: Make sure that no components of the DUSC (1) can come into contact with any hot and moving parts on the vehicle!
Also ensure that all components are at least 5 cm away from hot parts as well as hot gas coming from the exhaust!
After assembly, make sure that this distance is maintained in all vehicle positions!

© SW-MOTECH GmbH & Co. KG

Errors and omissions excepted
Subject to technical and design changes.

6

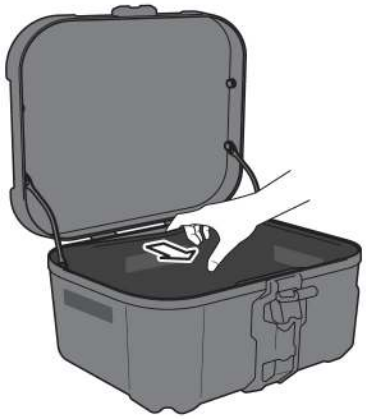

Removing the inlays

The DUSC comes with mounted inlays as standard. They can be removed if needed (e. g. for cleaning, see "Care" section).
Use a blunt object (e. g. a butter knife) to push out the **case lid inlay** that is stuck behind the frame profile; then remove the inlay from the case lid.
Remove the **inlay in the case body** from the Velcro strips on the side; then take the inlay out of the case body.

When reassembling the inlays, make sure to carefully push them behind the frame profiles. Also, press the inlay in the case body onto the Velcro strips.

The content translation is automated.
© SW-MOTECH GmbH & Co. KG

Errors and omissions excepted
Subject to technical and design changes.

7

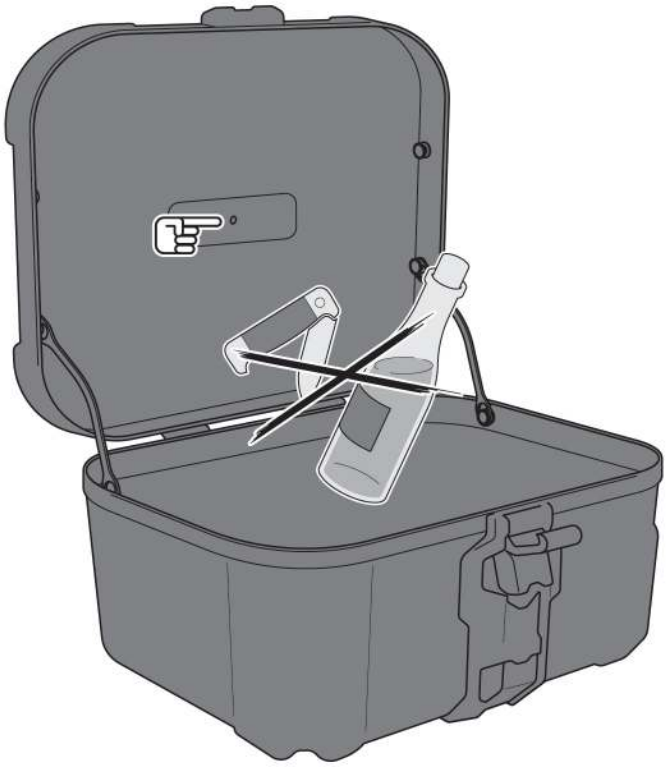

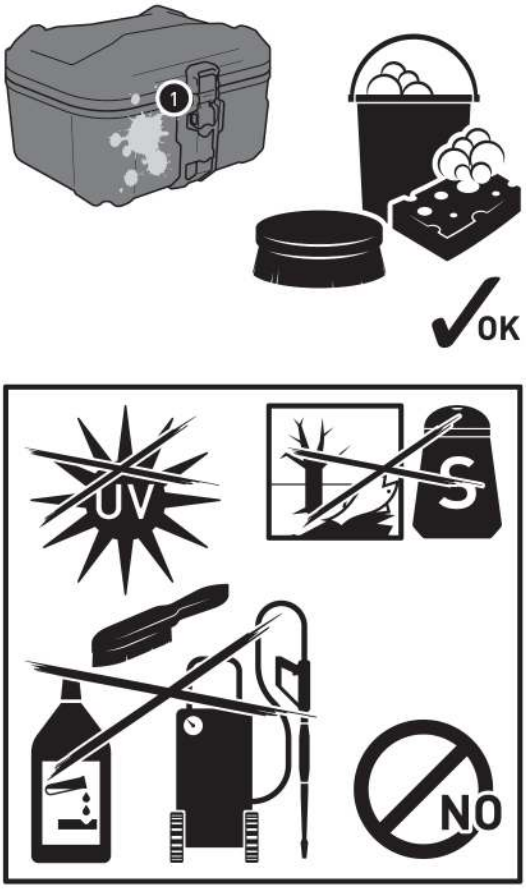

Loading the DUSC

⚠ WARNING: Ensure that the load is evenly distributed! Ensure that the load will not slip while driving!
⚠ ***NOTE:*** *Make sure that you never store sharp-edged, pointy or similar objects that could cause injury to persons or damage to the vehicle/DUSC!*
Be particularly careful not to damage the overpressure membrane built into the lid!

Caring for DUSC / inlays

For cleaning, use **ONLY** a soft textile brush, cloth or sponge and warm soapy water! Then rinse with clean water.
Do NOT use any harsh cleaning agents, abrasive cleaning utensils or pressure washer!
Be sure to clean the DUSC after winter driving to avoid salt damage.
⚠ ***NOTE:*** *Surface materials may be subject to fluctuations in color (fading) in the event of prolonged and intensive exposure to sunlight and the elements (e.g. smog, acid rain, etc.)! SW-MOTECH is not responsible for this type of wear!*

The content translation is automated.
© SW-MOTECH GmbH & Co. KG

Errors and omissions excepted
Subject to technical and design changes.

PRODUCT-SPECIFIC NOTES

⚠ ***NOTE:*** *Observe the country-specific regulations for registering/operating your vehicle or the applicable TÜV regulations. After assembly, have parts that are subject to registration entered in the vehicle documents by your test centre.*

⚠ DANGER: Carry out a comprehensive function check before driving!

⚠ DANGER: Check that the product is properly positioned before departure and at every rest stop (every 200 km)!

⚠ DANGER: The driving/braking behavior of the motorcycle changes noticeably after the attachment of this product!

⚠ DANGER: Lean angle and ground clearance may be restricted by this product!

⚠ DANGER: The maximum vehicle load defined by the vehicle manufacturer may NOT be exceeded.
The maximum permissible load of the SW-MOTECH rack/side rack may NOT be exceeded; make sure to take into account the dead weight of the product.

Dead weight DUSC M (with inlays): 4.7 kg (10.4 lbs)
Dead weight DUSC L (with inlays): 5.0 kg (11.0 lbs)

Dead weight DUSC M (without inlays): 3.9 kg (8.6 lbs)
Dead weight DUSC L (without inlays): 4.1 kg (9.0 lbs)

Payload when used as a top case:

≤ 5 kg (≤ 11 lbs)	≤ 130km/h (≤ 80mph)

Payload when used as a side case:

≤ 10KG (≤ 22 lbs)	≤ 130km/h (≤ 80mph)

© SW-MOTECH GmbH & Co. KG

Errors and omissions excepted
Subject to technical and design changes.

Item number: **HSK.00.745.11001/B**	Revision: **00** · Date: **02 - 2025**

DUSC L

~ 0.25 h.	EASY DIFFICULT

ENGLISH ·Thank you for choosing this premium product from SW-MOTECH. Visit our online shop for more information (e.g. model assignments). Required documents (e.g. national type approval) are available there for you to download.
Please read and understand all the instructions, safety information and warnings in these mounting instructions before mounting and using the product in order to avoid injury and damage. Keep these mounting instructions for reference.
This product was developed for vehicles in factory condition. Compatibility with original accessories or accessories from other manufacturers cannot be guaranteed.
These mounting instructions have been prepared to the best of our current knowledge. No legal claims relating to accuracy can be made. Errors and omissions excepted. We reserve the right to make technical and design changes. The copyright is held by SW-MOTECH.

SAFETY WARNING SYMBOL

⚠ **This warning symbol is used in these mounting instructions to warn of deadly dangers, injuries or other hazards. The words DANGER, WARNING or CAUTION are used as part of this warning symbol to convey important safety messages and information relating to the installation and use of this product. These words, together with the safety warning symbol, mean:**

⚠ **DANGER:** Indicates a hazardous situation which, if not avoided, will result in death or serious injury!

⚠ **WARNING:** Indicates a hazardous situation which, if not avoided, may result in death or serious injury!

⚠ **CAUTION:** Indicates a hazardous situation which, if not avoided, may result in minor or moderate injury!

⚠ ***NOTE:*** Important information, but not relating to a risk of death or injury (property damage only)!

GENERAL INFORMATION

⚠ **WARNING: Assembly and/or maintenance of this product requires advanced technical skill, appropriate tools, and a good understanding of tool usage and torque specifications. For your own safety, SW-MOTECH recommends having the assembly and/or maintenance carried out by a qualified and certified motorcycle workshop.**

⚠ **WARNING: If you do choose to assemble this product yourself, carefully and fully read the mounting instructions before assembly and use, and follow all instructions to avoid serious injury or death. Also observe all relevant information in the vehicle manual when mounting or using the product. IF YOU DO NOT UNDERSTAND ANY PART OF THESE MOUNTING INSTRUCTIONS OR NEED AN EXPLANATION AS TO A SPECIFIC INSTRUCTION, DO NOT ATTEMPT TO INSTALL THIS PRODUCT WITHOUT CONSULTING SW-MOTECH FOR ASSISTANCE!**

PREPARATION: Read the mounting instructions carefully and make sure that all parts on the parts list are available.

⚠ **CAUTION: Ensure that your vehicle is standing securely. Switch off the engine and remove the ignition key. Allow the engine/exhaust to cool down if necessary. Disconnect the battery when working on the electrical system. Only use proper tools and always wear safety goggles and gloves during assembly and maintenance. Have a second person help you with assembly and maintenance.**

ASSEMBLY: All parts and connections removed from the vehicle must be reinstalled according to the vehicle manufacturer's specifications or replaced with parts and hardware supplied by SW-MOTECH.

⚠ **WARNING: Secure all threads with a medium-strength liquid threadlocker, unless otherwise specified.**

⚠ **DANGER: Tightening torques not defined by SW-MOTECH must be obtained from the vehicle manufacturer or a certified motorbike workshop.**

FUNCTIONAL CHECK: After mounting the product, ensure that no moving parts are obstructed and that the function of the vehicle is not impeded. Cables and hoses must not rub against each other and/or be hindered in any way.

⚠ **WARNING: Carry out a comprehensive functionality check before you start to drive. Check the tightening torque of all connections and the tight fit of the product after the first 50 km and then at regular intervals. Mounted accessories can change the handling and stability of the vehicle.**

SW-MOTECH GmbH & Co. KG
Ernteweg 7-10
35282 Rauschenberg
Germany

info@sw-motech.com
www.sw-motech.com

The content translation is automated.
© SW-MOTECH GmbH & Co. KG

Errors and omissions excepted
Subject to technical and design changes.

Take note of the symbols and what they mean in the ASSEMBLY section. If the term OEM appears in the ASSEMBLY section, the vehicle manufacturer's specifications must be observed and applied.

If you have any questions, please don't hesitate to contact our Customer Service team or our distributors. You can find our telephone number and a list of our distributors in our online shop:
www.sw-motech.com

Do not use thread lock: Indicates that no liquid thread lock should be used at this point.

Tighten by hand: Indicates that the attachment must be carefully tightened by hand.

© SW-MOTECH GmbH & Co. KG

Errors and omissions excepted
Subject to technical and design changes.

1

1

HSK.00.745.80000/B

1/1

2

2

HSK.00.745.027.02

2/2

3

3

HSK.00.745.047.02

1/1

4

4 x 10; WN 1452

SC.ST.040.010.48.1452.109

2/2

5

T20

TRX.T20

1/1

© SW-MOTECH GmbH & Co. KG

Errors and omissions excepted
Subject to technical and design changes.

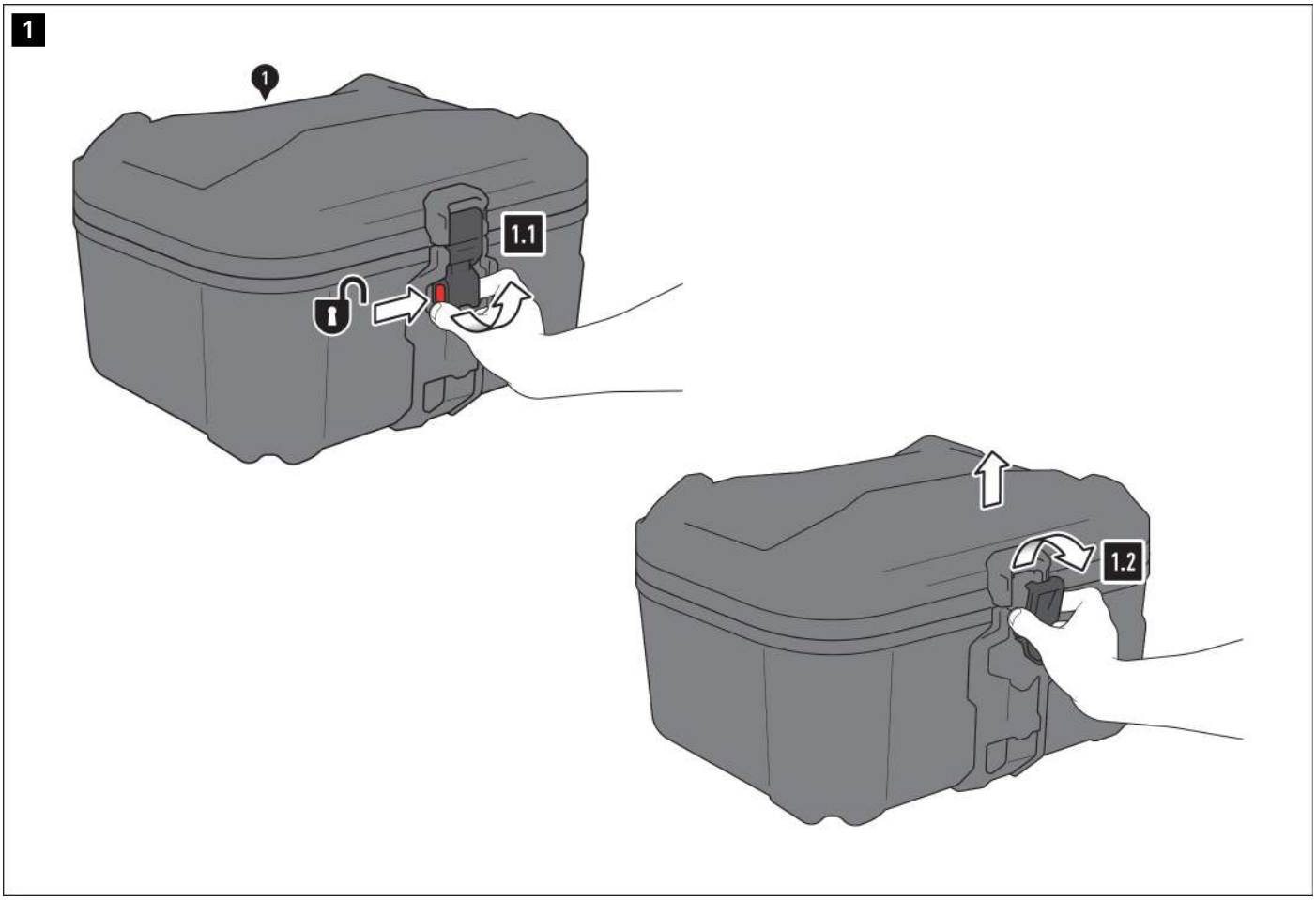

⚠ WARNING: Always wear eye and hand protection!
⚠ WARNING: Always use the proper tools!

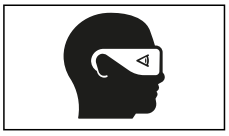

Opening the lid

1.1 - Press the DUSC release button (1) and pull the lid latch buckle to the open position.

1.2 - Remove the latch buckle from the corresponding bracket and open the lid.

© SW-MOTECH GmbH & Co. KG

Errors and omissions excepted
Subject to technical and design changes.

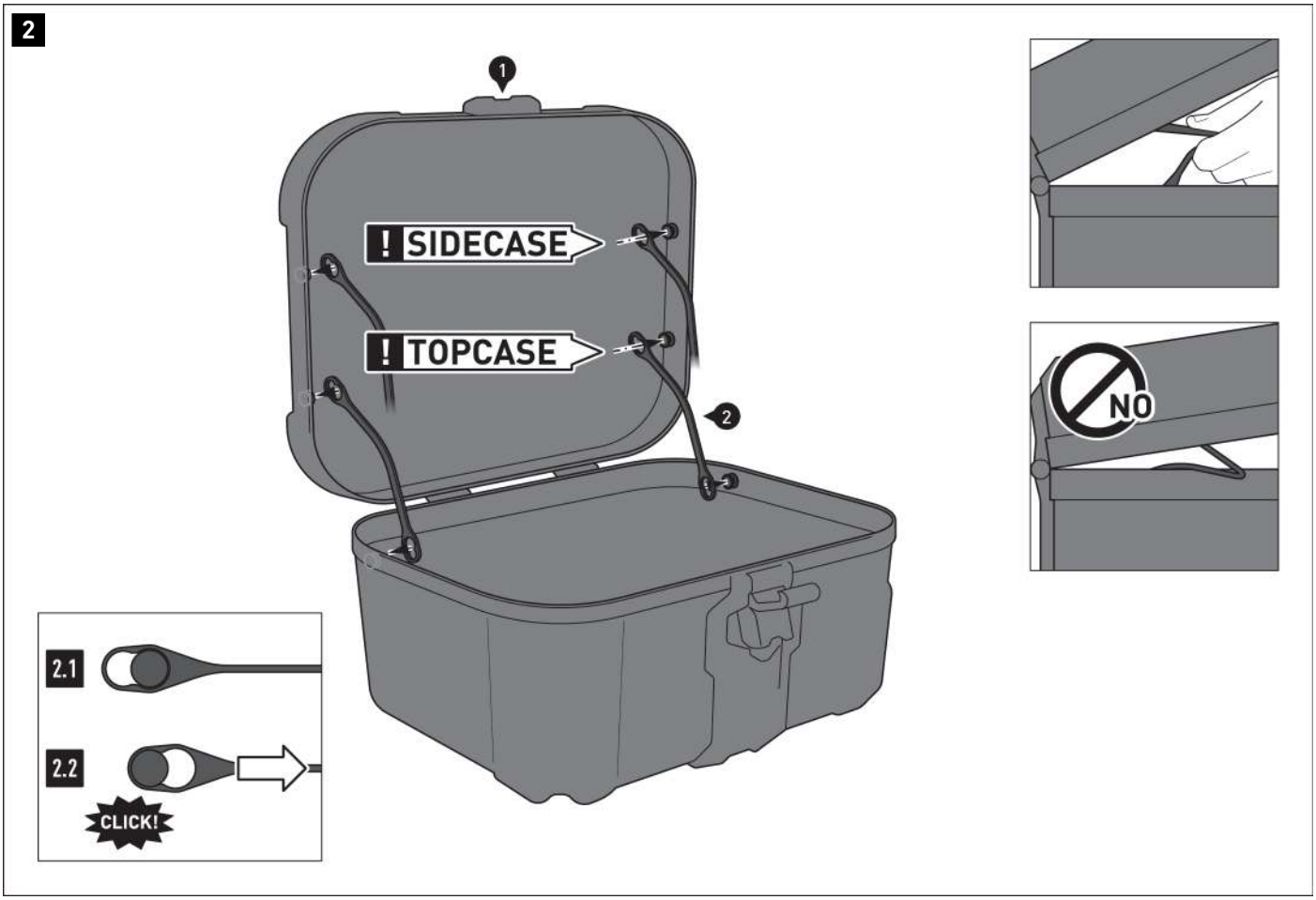

Installing the lid limiter

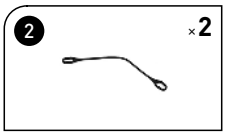

2.1 - Place the lid limiters (2) with the large openings on the mushroom-shaped supports provided
⚠ ***NOTE:*** *Pay attention to the proper use of the DUSC (1):**top case** or **side case**. Fasten the lid limiters (2) to the respective mushroom-shaped DUSC (1).*

2.2 - Pull the lid limiters (2) into fixed position.

⚠ ***NOTE:*** *Before closing the lid for the first time, the lid limiters (2) must be slightly compressed. When closing the lid, make sure that the lid limiters (2) are not trapped between the lid and the case body.*

© SW-MOTECH GmbH & Co. KG

Errors and omissions excepted
Subject to technical and design changes.

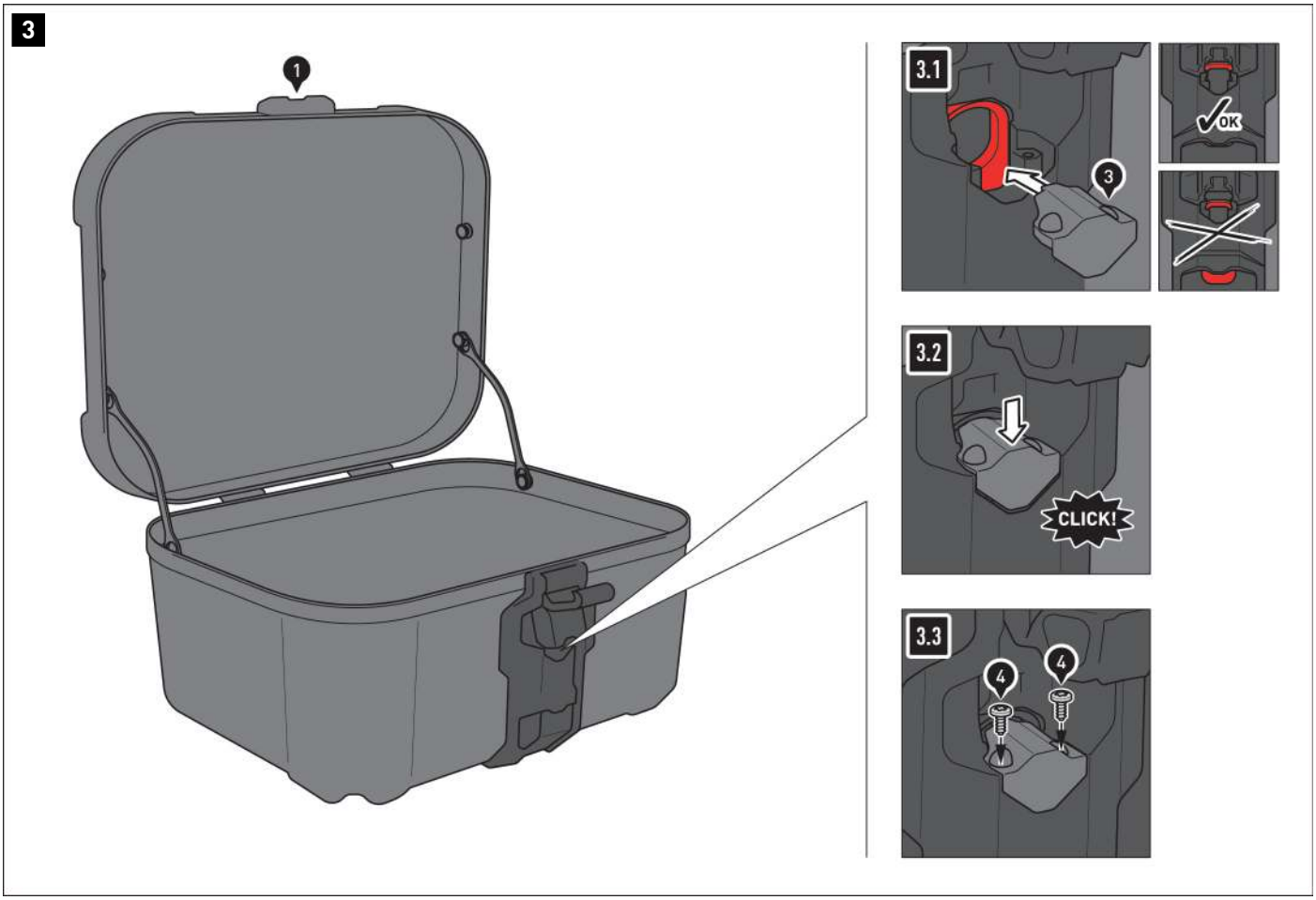

Installing lock casing connector

⚠ ***NOTE:*** *If you have opted for the DUSC lock set, this step is not necessary. Install the lock set instead.*

3.1 - Open the DUSC latch buckle (1) and position the latch housing connector (3) as shown.
⚠ ***NOTE:*** *Make sure the locking tab is in the unlocked (up) position. If necessary, the locking tab must be pushed up into the unlocked position.*

3.2 - Push the latch housing connector (3) down until it clicks into place.

3.3 - Screw in the latch housing connector (3) using the screws (4) and the torx key (5). Carefully tighten the screws by hand.
⚠ **WARNING: Over-tightening the screws may damage the lock casing!**

⚠ ***NOTE:*** *Ensure that the locking mechanism is in working order!*

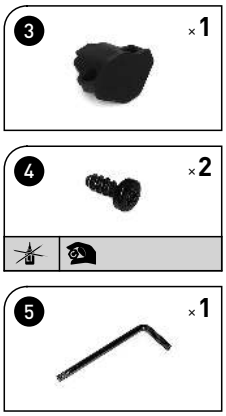

© SW-MOTECH GmbH & Co. KG

Errors and omissions excepted
Subject to technical and design changes.

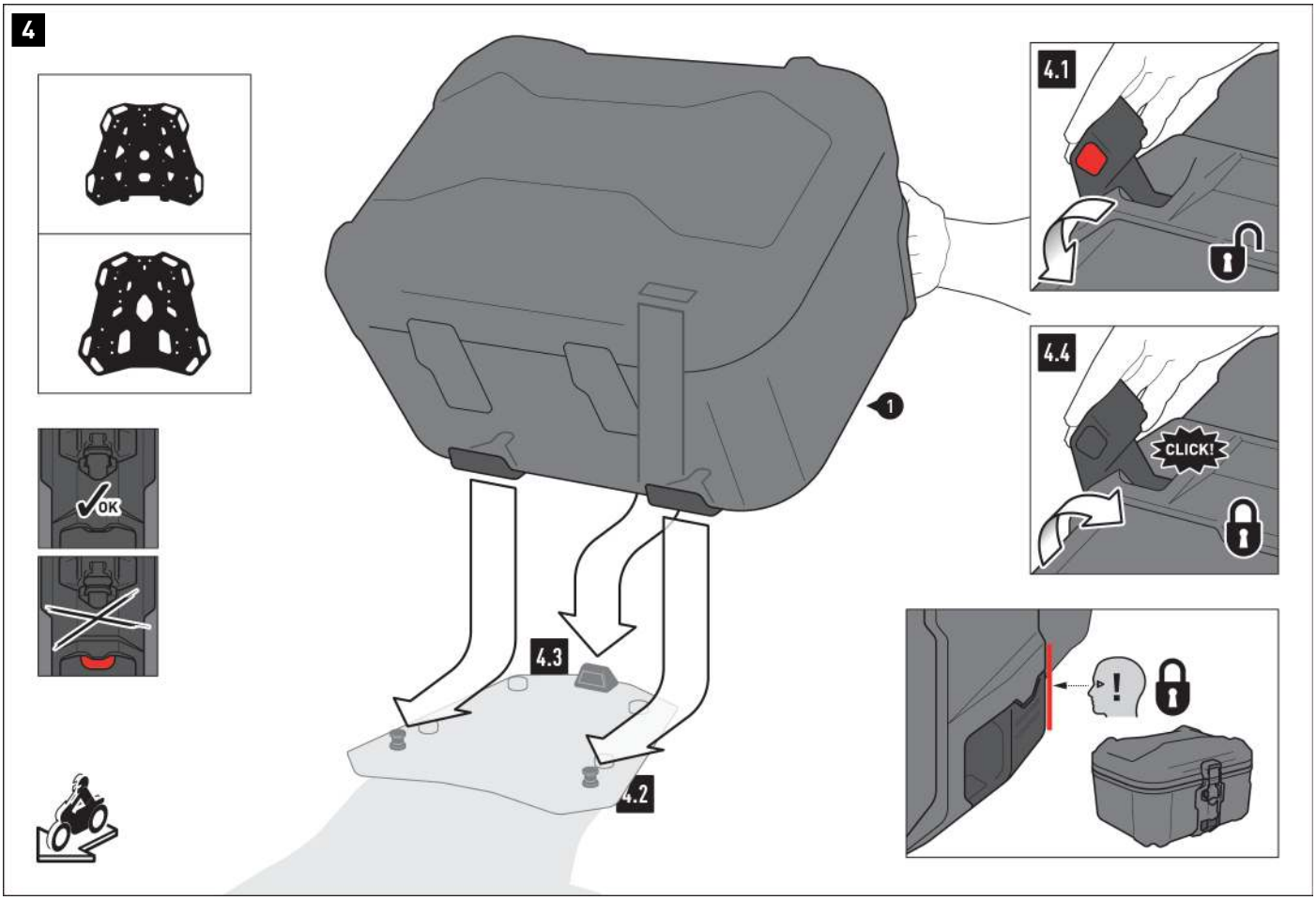

Attaching the DUSC to a top case

⚠ ***NOTE:*** *Prior to fastening, ensure that the lock (DUSC lock set) is in the open position (if applicable); see detailed drawings on the left!*

4.1 - Press the DUSC release button (1) and pull the fastening system latch buckle to the open position.

4.2 - Press the DUSC (1) with the two locking openings onto the mushroom-shaped supports of your SW-MOTECH rack.

4.3 - Press the DUSC (1) with the locking opening onto the locking lug of your SW-MOTECH rack.

4.4 - Press the system latch buckle to closed position.
⚠ WARNING: You should be able to hear a clicking sound!
⚠ WARNING: Check that the DUSC is firmly in place! Make sure that the latch buckle is flush with the latch buckle case!

⚠ WARNING: Make sure that no components of the DUSC (1) can come into contact with any hot and moving parts on the vehicle!
Also ensure that all components are at least 5 cm away from hot parts as well as hot gas coming from the exhaust!
After assembly, make sure that this distance is maintained in all vehicle positions!

The content translation is automated.
© SW-MOTECH GmbH & Co. KG

Errors and omissions excepted
Subject to technical and design changes.

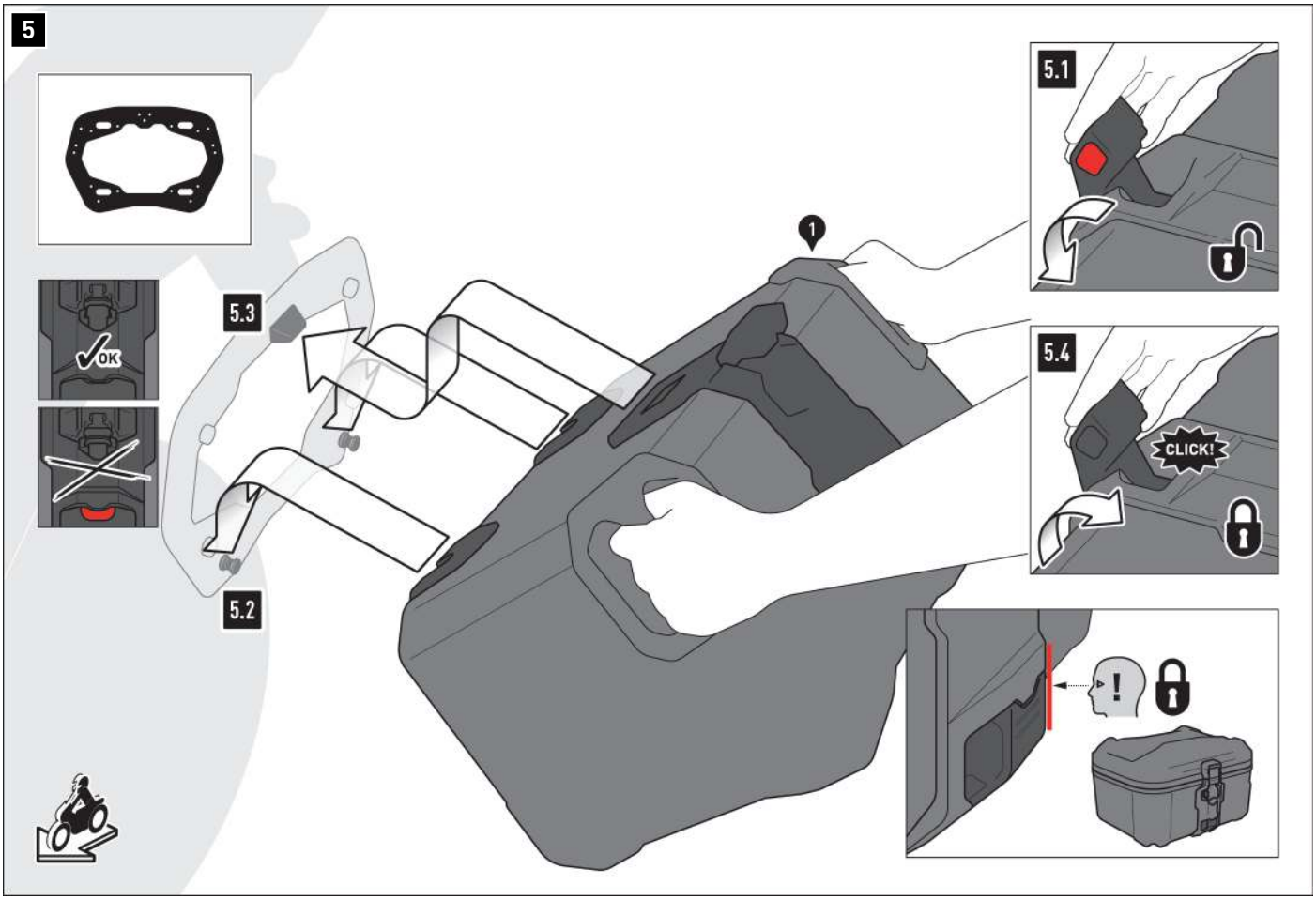

Attaching the DUSC to a side case

⚠ ***NOTE:*** *Prior to fastening, ensure that the lock (DUSC lock set) is in the open position (if applicable); see detailed drawings on the left!*

5.1 - Press the DUSC release button (1) and pull the system latch buckle to the open position.

5.2 - Slide the DUSC (1) with the two locking openings onto the mushroom-shaped supports of your SW-MOTECH side carrier.

5.3 - Press the DUSC (1) with the locking opening onto the locking lug of your SW-MOTECH side carrier.

5.4 - Press the system latch buckle to closed position.
⚠ WARNING: Make sure you hear it clicking into place!
⚠ WARNING: Check that the DUSC is firmly in place! Make sure that the latch buckle is flush with the latch buckle case!

⚠ WARNING: Make sure that no components of the DUSC (1) can come into contact with any hot and moving parts on the vehicle!
Also ensure that all components are at least 5 cm away from hot parts as well as hot gas coming from the exhaust!
After assembly, make sure that this distance is maintained in all vehicle positions!

© SW-MOTECH GmbH & Co. KG

Errors and omissions excepted
Subject to technical and design changes.

6

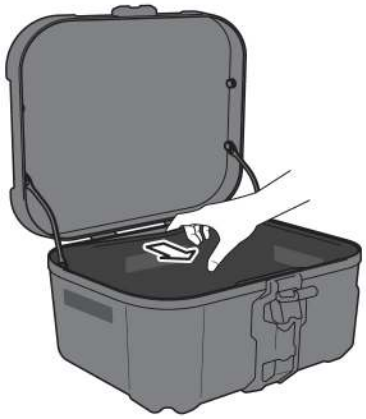

Removing the inlays

The DUSC comes with mounted inlays as standard. They can be removed if needed (e. g. for cleaning, see "Care" section).
Use a blunt object (e. g. a butter knife) to push out the **case lid inlay** that is stuck behind the frame profile; then remove the inlay from the case lid.
Remove the **inlay in the case body** from the Velcro strips on the side; then take the inlay out of the case body.

When reassembling the inlays, make sure to carefully push them behind the frame profiles. Also, press the inlay in the case body onto the Velcro strips.

The content translation is automated.
© SW-MOTECH GmbH & Co. KG

Errors and omissions excepted
Subject to technical and design changes.

7

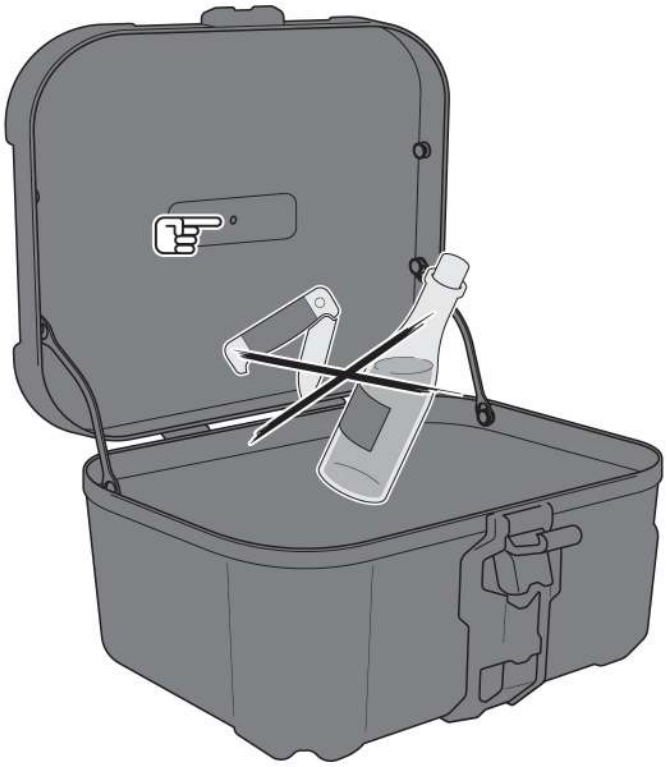

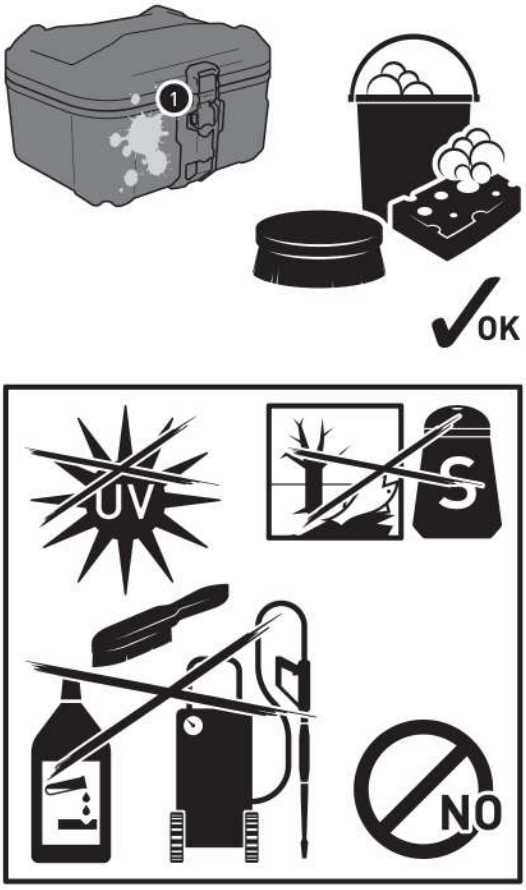

Loading the DUSC

⚠ WARNING: Ensure that the load is evenly distributed! Ensure that the load will not slip while driving!
⚠ ***NOTE:*** *Make sure that you never store sharp-edged, pointy or similar objects that could cause injury to persons or damage to the vehicle/DUSC!*
Be particularly careful not to damage the overpressure membrane built into the lid!

Caring for DUSC / inlays

For cleaning, use **ONLY** a soft textile brush, cloth or sponge and warm soapy water! Then rinse with clean water.
Do NOT use any harsh cleaning agents, abrasive cleaning utensils or pressure washer!
Be sure to clean the DUSC after winter driving to avoid salt damage.
⚠ ***NOTE:*** *Surface materials may be subject to fluctuations in color (fading) in the event of prolonged and intensive exposure to sunlight and the elements (e.g. smog, acid rain, etc.)! SW-MOTECH is not responsible for this type of wear!*

The content translation is automated.
© SW-MOTECH GmbH & Co. KG

Errors and omissions excepted
Subject to technical and design changes.

PRODUCT-SPECIFIC NOTES

⚠ ***NOTE:*** *Observe the country-specific regulations for registering/operating your vehicle or the applicable TÜV regulations. After assembly, have parts that are subject to registration entered in the vehicle documents by your test centre.*

⚠ DANGER: Carry out a comprehensive function check before driving!

⚠ DANGER: Check that the product is properly positioned before departure and at every rest stop (every 200 km)!

⚠ DANGER: The driving/braking behavior of the motorcycle changes noticeably after the attachment of this product!

⚠ DANGER: Lean angle and ground clearance may be restricted by this product!

⚠ DANGER: The maximum vehicle load defined by the vehicle manufacturer may NOT be exceeded.
The maximum permissible load of the SW-MOTECH rack/side rack may NOT be exceeded; make sure to take into account the dead weight of the product.

Dead weight DUSC M (with inlays): 4.7 kg (10.4 lbs)
Dead weight DUSC L (with inlays): 5.0 kg (11.0 lbs)

Dead weight DUSC M (without inlays): 3.9 kg (8.6 lbs)
Dead weight DUSC L (without inlays): 4.1 kg (9.0 lbs)

Payload when used as a top case:

≤ 5 kg (≤ 11 lbs)	≤ 130km/h (≤ 80mph)

Payload when used as a side case:

≤ 10KG (≤ 22 lbs)	≤ 130km/h (≤ 80mph)

© SW-MOTECH GmbH & Co. KG

Errors and omissions excepted
Subject to technical and design changes.

Item number: **LOC.00.745.10200**	Revision: **00** · Date: **08 - 2023**

Hard case lock set

~ 0.25 h.	EASY DIFFICULT

ENGLISH ·Thank you for choosing this premium product from SW-MOTECH. Visit our online shop for more information (e.g. model assignments). Required documents (e.g. national type approval) are available there for you to download.
Please read and understand all the instructions, safety information and warnings in these mounting instructions before mounting and using the product in order to avoid injury and damage. Keep these mounting instructions for reference.
This product was developed for vehicles in factory condition. Compatibility with original accessories or accessories from other manufacturers cannot be guaranteed.
These mounting instructions have been prepared to the best of our current knowledge. No legal claims relating to accuracy can be made. Errors and omissions excepted. We reserve the right to make technical and design changes. The copyright is held by SW-MOTECH.

SAFETY WARNING SYMBOL

⚠ **This warning symbol is used in these mounting instructions to warn of deadly dangers, injuries or other hazards. The words DANGER, WARNING or CAUTION are used as part of this warning symbol to convey important safety messages and information relating to the installation and use of this product. These words, together with the safety warning symbol, mean:**

⚠ **DANGER:** Indicates a hazardous situation which, if not avoided, will result in death or serious injury!

⚠ **WARNING:** Indicates a hazardous situation which, if not avoided, may result in death or serious injury!

⚠ **CAUTION:** Indicates a hazardous situation which, if not avoided, may result in minor or moderate injury!

⚠ ***NOTE:*** Important information, but not relating to a risk of death or injury (property damage only)!

GENERAL INFORMATION

⚠ **WARNING: Assembly and/or maintenance of this product requires advanced technical skill, appropriate tools, and a good understanding of tool usage and torque specifications. For your own safety, SW-MOTECH recommends having the assembly and/or maintenance carried out by a qualified and certified motorcycle workshop.**

⚠ **WARNING: If you do choose to assemble this product yourself, carefully and fully read the mounting instructions before assembly and use, and follow all instructions to avoid serious injury or death. Also observe all relevant information in the vehicle manual when mounting or using the product. IF YOU DO NOT UNDERSTAND ANY PART OF THESE MOUNTING INSTRUCTIONS OR NEED AN EXPLANATION AS TO A SPECIFIC INSTRUCTION, DO NOT ATTEMPT TO INSTALL THIS PRODUCT WITHOUT CONSULTING SW-MOTECH FOR ASSISTANCE!**

PREPARATION: Read the mounting instructions carefully and make sure that all parts on the parts list are available.

⚠ **CAUTION: Ensure that your vehicle is standing securely. Switch off the engine and remove the ignition key. Allow the engine/exhaust to cool down if necessary. Disconnect the battery when working on the electrical system. Only use proper tools and always wear safety goggles and gloves during assembly and maintenance. Have a second person help you with assembly and maintenance.**

ASSEMBLY: All parts and connections removed from the vehicle must be reinstalled according to the vehicle manufacturer's specifications or replaced with parts and hardware supplied by SW-MOTECH.

⚠ **WARNING: Secure all threads with a medium-strength liquid threadlocker, unless otherwise specified.**

⚠ **DANGER: Tightening torques not defined by SW-MOTECH must be obtained from the vehicle manufacturer or a certified motorbike workshop.**

FUNCTIONAL CHECK: After mounting the product, ensure that no moving parts are obstructed and that the function of the vehicle is not impeded. Cables and hoses must not rub against each other and/or be hindered in any way.

⚠ **WARNING: Carry out a comprehensive functionality check before you start to drive. Check the tightening torque of all connections and the tight fit of the product after the first 50 km and then at regular intervals. Mounted accessories can change the handling and stability of the vehicle.**

SW-MOTECH GmbH & Co. KG
Ernteweg 7-10
35282 Rauschenberg
Germany

info@sw-motech.com
www.sw-motech.com

The content translation is automated.
© SW-MOTECH GmbH & Co. KG

Errors and omissions excepted
Subject to technical and design changes.

Take note of the symbols and what they mean in the ASSEMBLY section. If the term OEM appears in the ASSEMBLY section, the vehicle manufacturer's specifications must be observed and applied.

If you have any questions, please don't hesitate to contact our Customer Service team or our distributors. You can find our telephone number and a list of our distributors in our online shop:
www.sw-motech.com

© SW-MOTECH GmbH & Co. KG

Errors and omissions excepted
Subject to technical and design changes.

2

1

HSK.00.745.500.04

3/3

2

T20

TRX.T20

1/1

3

ALK.00.165.A63

2/2

3

3

ALK.00.165.562.01

1/1

4

5

QLS.00.095.520.01

2/2

6

SV.ST.095.007.LK.02

2/2

The content translation is automated.
© SW-MOTECH GmbH & Co. KG

Errors and omissions excepted
Subject to technical and design changes.

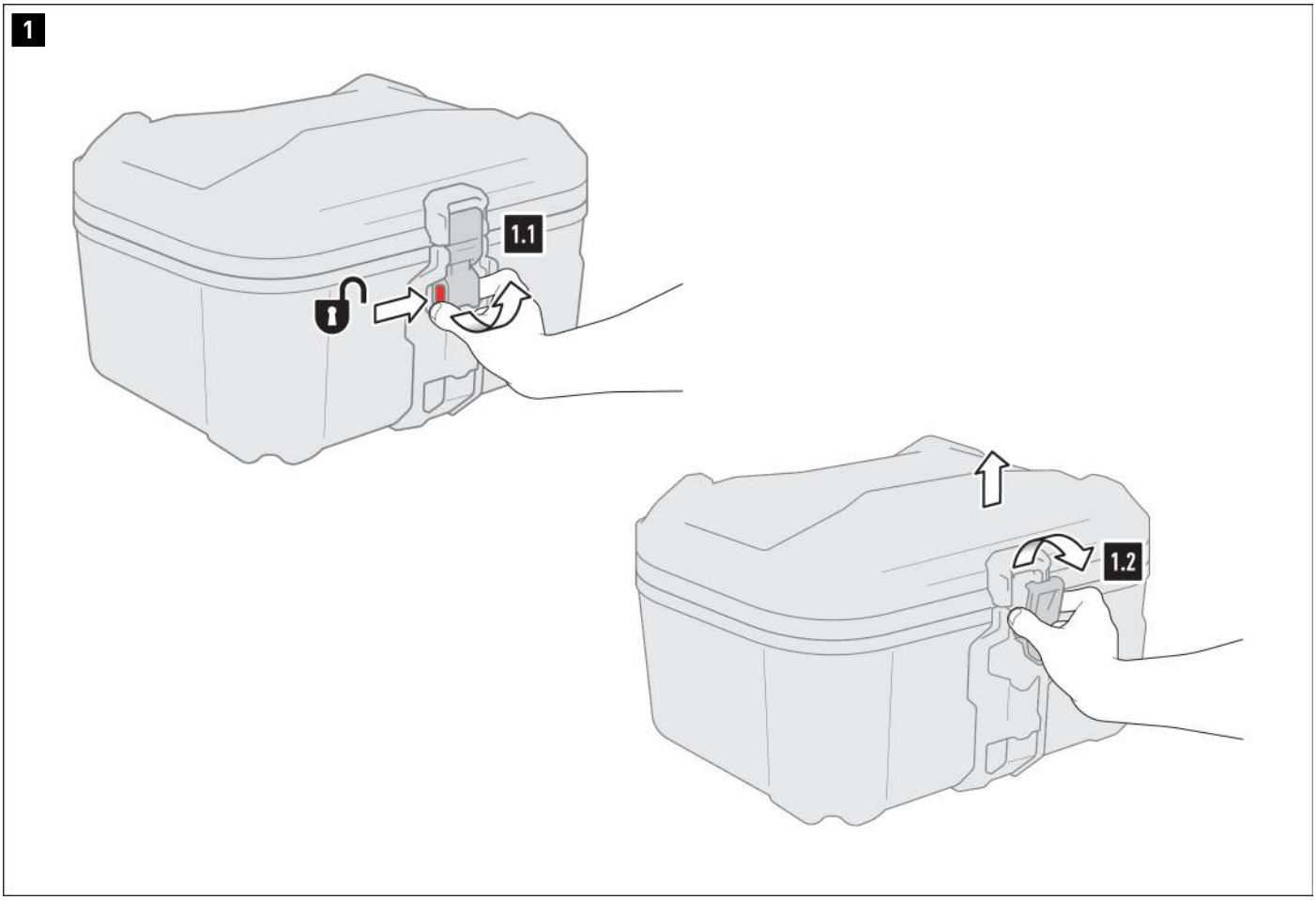

⚠ WARNING: Always wear eye and hand protection!
⚠ WARNING: Always use the proper tools!

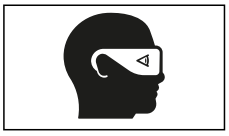

Opening the lid

1.1 - Press the DUSC release button (*) and pull the lid latch buckle into the open position.

1.2 - Remove the latch buckle from the corresponding bracket and open the lid.

© SW-MOTECH GmbH & Co. KG

Errors and omissions excepted
Subject to technical and design changes.

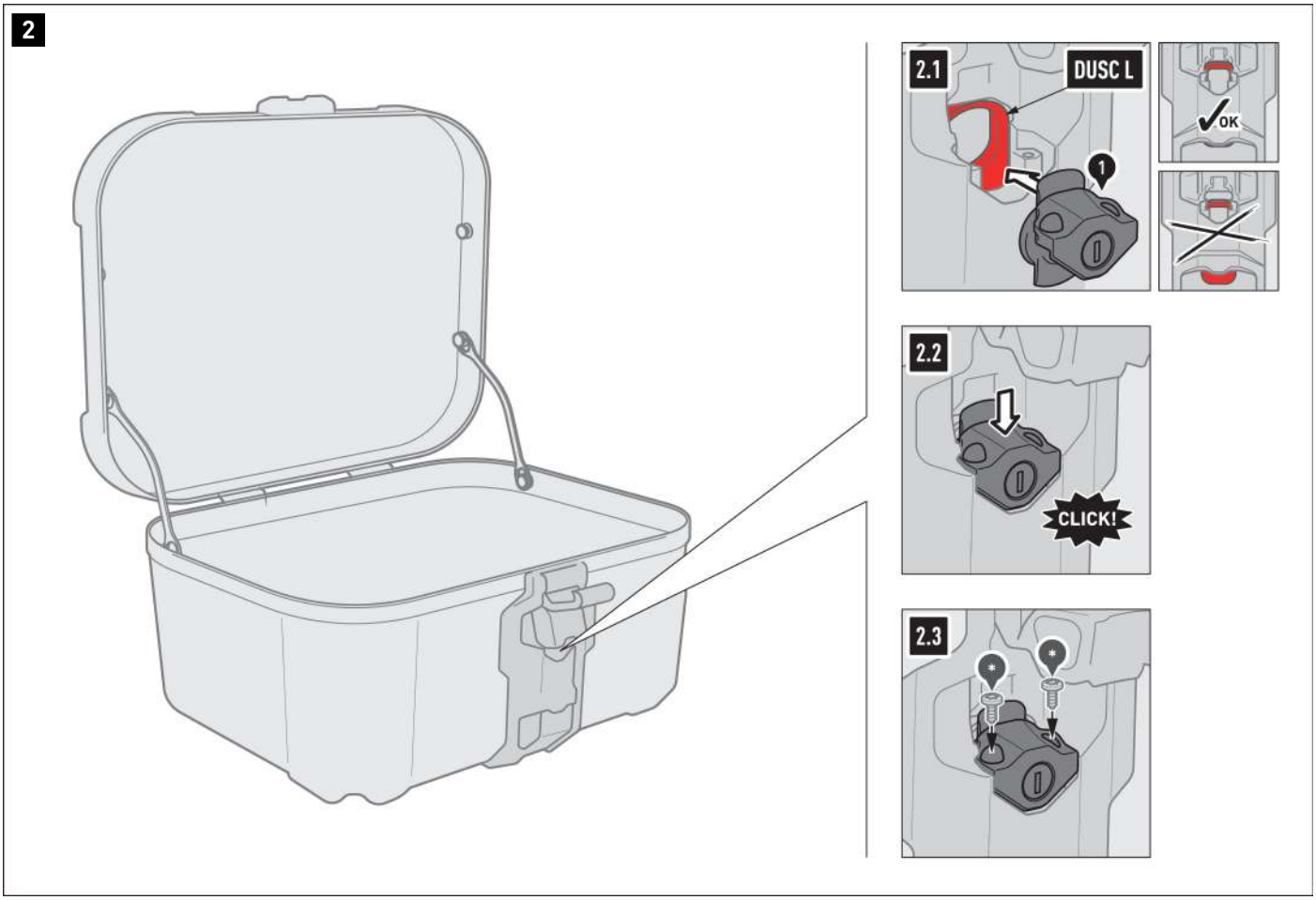

Install DUSC lock

2.1 - Open the DUSC (*) latch buckle and position the lock (1) as shown.
⚠ ***NOTE: DUSC L ONLY:*** *Make sure the locking tab (highlighted in red) is in the unlocked position (up)! If necessary, the locking tab must be pushed up into the unlocked position!*

2.2 - Push the lock (1) down until it clicks into place.

2.3 - Screw in the lock (1) using the screws (*) supplied with the DUSC and the torx key (2). Carefully tighten the screws by hand.
⚠ **WARNING: Over-tightening the screws may damage the lock casing!**

⚠ ***NOTE:*** *Ensure that the locking mechanism is in working order!*

⚠ ***NOTE:*** *NEVER lubricate the lock cylinder with oil! Only use graphite powder!*

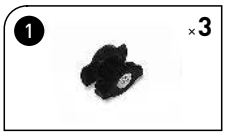

© SW-MOTECH GmbH & Co. KG

Errors and omissions excepted
Subject to technical and design changes.

3

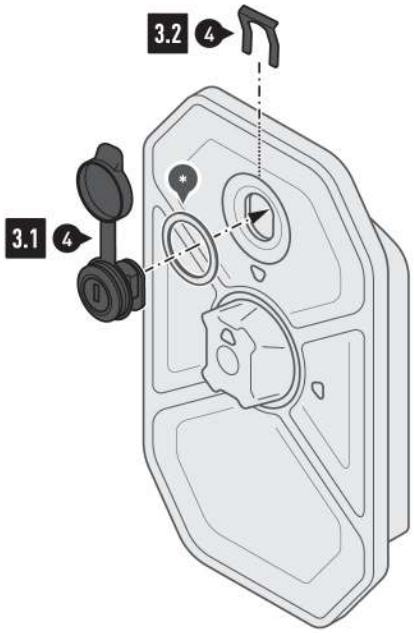

Install toolbox lock

3.1 - Insert the lock (4) with the sealing ring (*) supplied with the toolbox in the lock hole of the cover. Secure the lock (4) on the inside with the safety clip (4)

⚠ ***NOTE:*** *NEVER lubricate the lock cylinder with oil! Only use graphite powder!*

© SW-MOTECH GmbH & Co. KG

Errors and omissions excepted
Subject to technical and design changes.

4

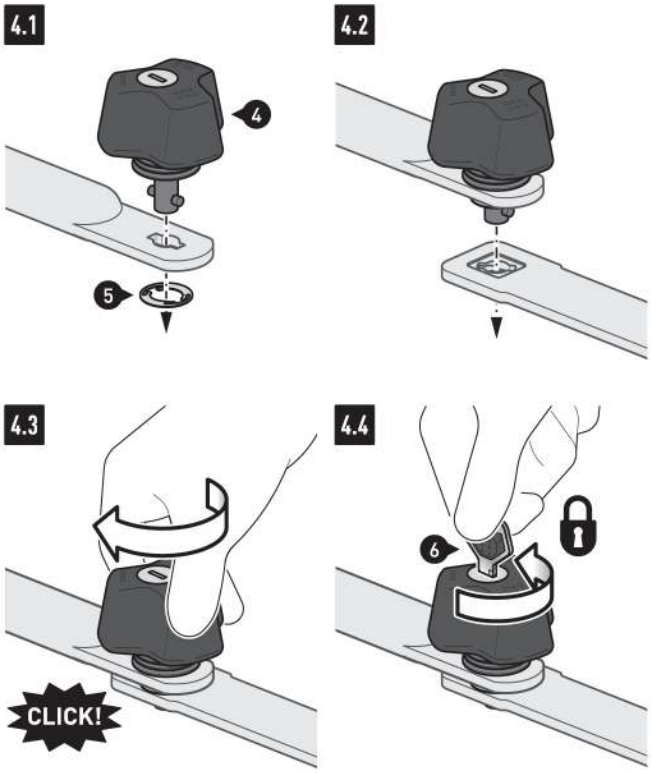

Mount anti-theft protection device for PRO side carrier

4.1 - Insert the anti-theft protection device (5) into the side carrier opening defined in the side carrier mounting instructions. Secure the anti-theft protection device (5) with the lock washer (6).

4.2 - Now insert the anti-theft protection device (5) in the opening of the side support fastener ...

4.3 - ... and turn the anti-theft protection device (5) until it engages.

4.4 - Then the anti-theft protection device (5) must be secured against unscrewing.

⚠ ***NOTE:*** *NEVER lubricate the lock cylinder with oil! Only use graphite powder!*

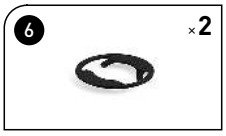

© SW-MOTECH GmbH & Co. KG

Errors and omissions excepted
Subject to technical and design changes.

PRODUCT-SPECIFIC NOTES

⚠ ***NOTE***: *Observe the country-specific regulations for the registration/operation of your vehicle or applicable TÜV regulations. After assembly, have parts that are subject to registration entered in the vehicle documents by your test centre.*

© SW-MOTECH GmbH & Co. KG

Errors and omissions excepted
Subject to technical and design changes.